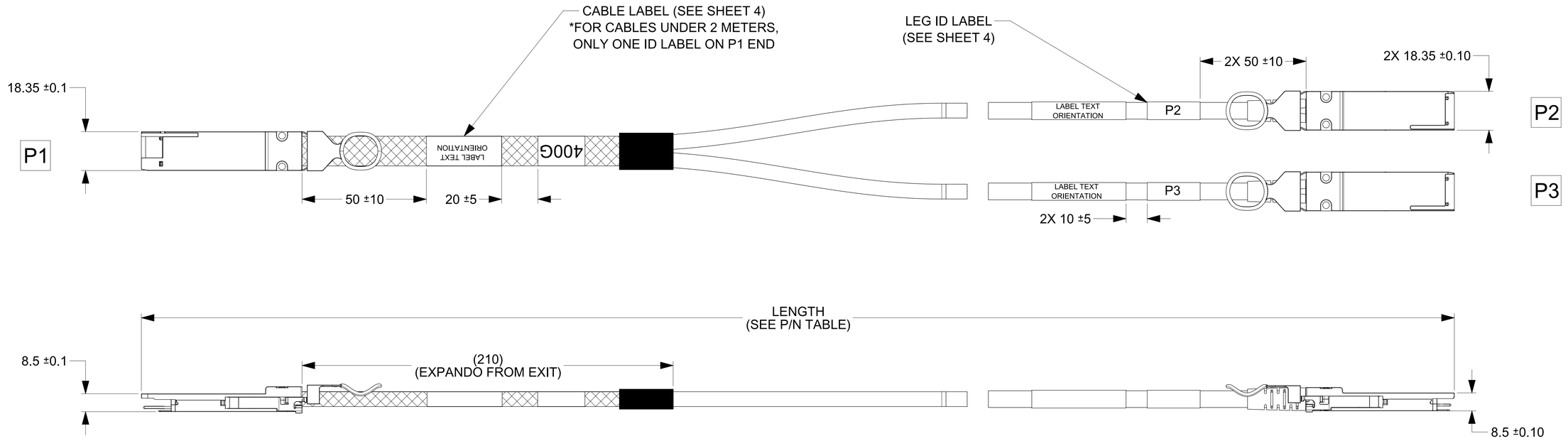

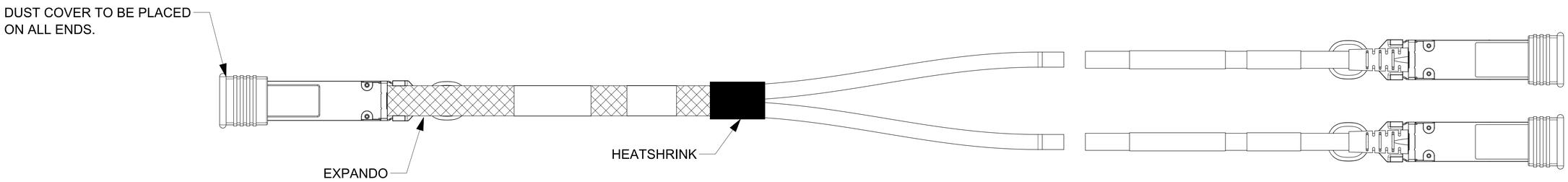

NOTES:
1. DELETED
2. DELETED
3. IMPEDANCE - 100 OHMS DIFFERENTIAL
4. DELETED
5. EEPROM MAP AVAILABLE UPON REQUEST
6. DELETED

FUNCTIONAL SYMBOLS	THIS DRAWING CONTAINS INFORMATION THAT IS PROPRIETARY TO MOLEX ELECTRONIC TECHNOLOGIES, LLC AND SHOULD NOT BE USED WITHOUT WRITTEN PERMISSION				
FA = 0	DIMENSION UNITS: MM	SCALE: 1:1	CURRENT REV DESC: SEE REVISION HISTORY	molex	
FC = 0	GENERAL TOLERANCES (UNLESS SPECIFIED)			QSFP-DD TO 2-ZQSFP+ 56G CABLE ASSEMBLY	
FD = 0	ANGULAR TOL ± 5"			PRODUCT CUSTOMER DRAWING	
DIVISIONAL SYMBOLS	4 PLACES ±		STATUS: Production	DOCUMENT NUMBER: 2033660001	DOC TYPE: PSD / DOC PART: 000 / REVISION: U
	3 PLACES ±		DRWN: Naveen R 2026-06-04		
	2 PLACES ±		CHK'D: Chiranjeevi Auvrav Simha M V 2026-06-08		
	1 PLACE ±		APPR: Srikanth Ramappa 2026-06-22		
	0 PLACES ±				
	DRAFT WHERE APPLICABLE MUST REMAIN WITHIN DIMENSIONS		THIRD ANGLE PROJECTION / DRAWING: D-SIZE / SERIES: 203366	MATERIAL NUMBER: SEE P/N TABLE	CUSTOMER: GENERAL MARKET / SHEET NUMBER: 1 OF 6

zQSFP+ CABLE BEND RADIUS

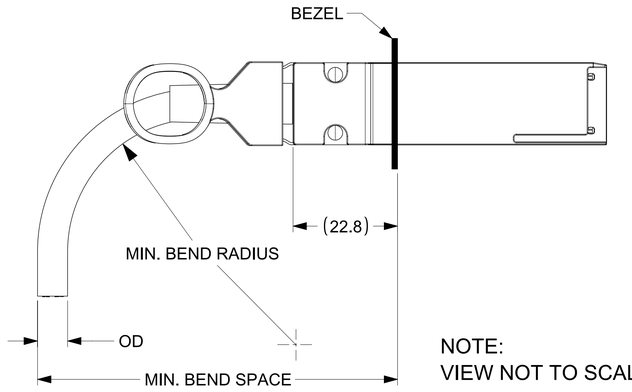

NOTE:
VIEW NOT TO SCALE.

CABLE AWG	OD	MIN BEND RADIUS	MIN BEND SPACE
26	9.0	45	77
28	7.9	40	71
30	6.7	34	64

QSFP-DD CABLE BEND RADIUS

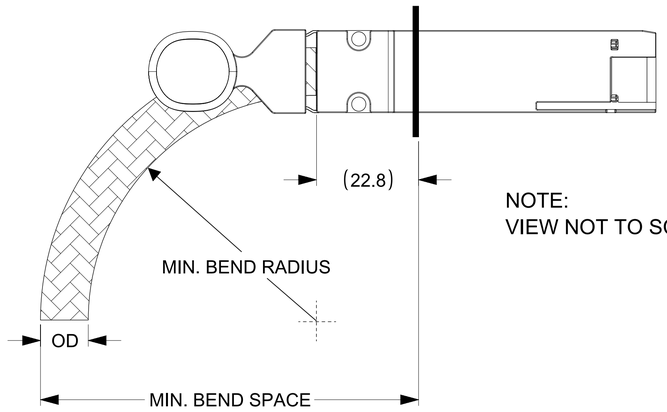

NOTE:
VIEW NOT TO SCALE.

CABLE AWG	OD	MIN BEND RADIUS	MIN BEND SPACE
26	13	65	101
28	11	55	89
30	9.4	47	79

THIS DRAWING CONTAINS INFORMATION THAT IS PROPRIETARY TO MOLEX ELECTRONIC TECHNOLOGIES, LLC AND SHOULD NOT BE USED WITHOUT WRITTEN PERMISSION

FUNCTIONAL SYMBOLS
FA = 0
FC = 0
FP = 0
DIVISIONAL SYMBOLS

DIMENSION UNITS: MM
SCALE: 1:1
GENERAL TOLERANCES (UNLESS SPECIFIED)
ANGULAR TOL ± 5°
4 PLACES ±
3 PLACES ±
2 PLACES ±
1 PLACE ±
0 PLACES ±
DRAFT WHERE APPLICABLE MUST REMAIN WITHIN DIMENSIONS

CURRENT REV DESC: SEE REVISION HISTORY

STATUS: Production
DRWN: Naveen R 2026-06-04
CHK'D: Chiranjeevi Auvrav Simha M V 2026-06-08
APPR: Srikanth Ramappa 2026-06-22

THIRD ANGLE PROJECTION
DRAWING: D-SIZE
SERIES: 203366
MATERIAL NUMBER: SEE P/N TABLE
CUSTOMER: GENERAL MARKET

molex

QSFP-DD TO 2-ZQSFP+ 56G CABLE ASSEMBLY

PRODUCT CUSTOMER DRAWING

DOCUMENT NUMBER	DOC TYPE	DOC PART	REVISION
2033660001	PSD	000	U

SHEET NUMBER: 2 OF 6

WIRING DIAGRAM

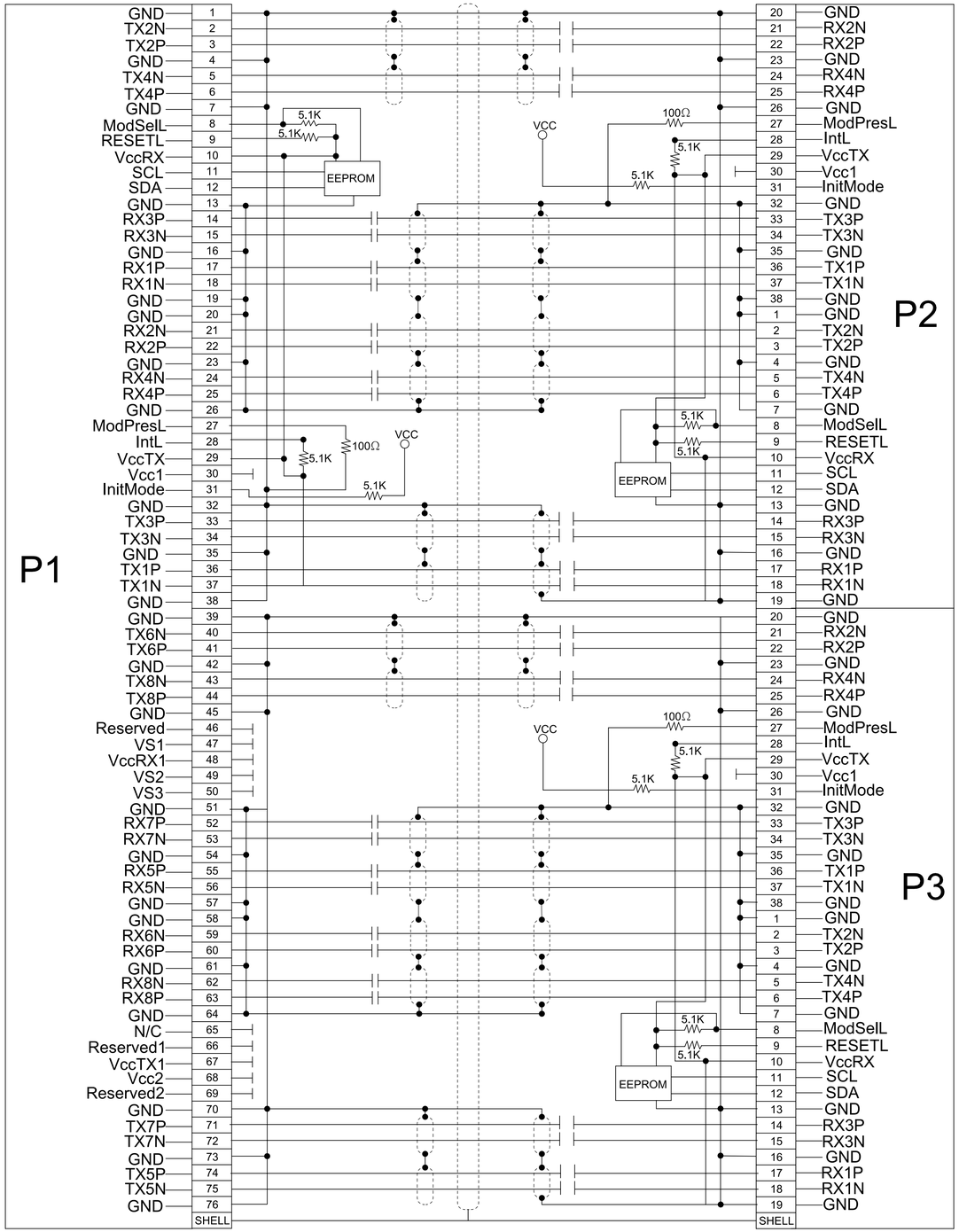

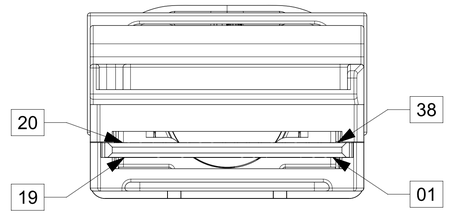

ZQSFP+ END

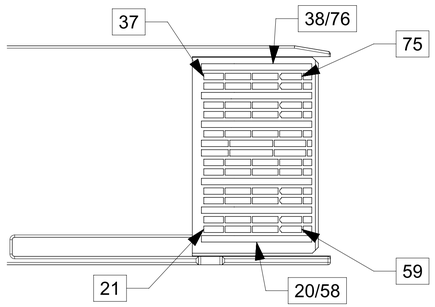

TOP VIEW

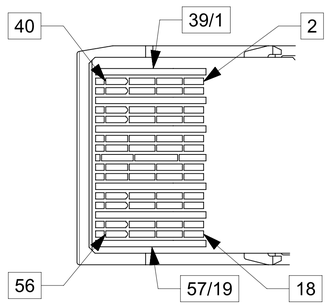

BOTTOM VIEW

DDQ END

NOTES:
1. DC BLOCKING CAPS ON RECEIVE SIDE ONLY
2. DELETED

FUNCTIONAL SYMBOLS	THIS DRAWING CONTAINS INFORMATION THAT IS PROPRIETARY TO MOLEX ELECTRONIC TECHNOLOGIES, LLC AND SHOULD NOT BE USED WITHOUT WRITTEN PERMISSION		
FA = 0	DIMENSION UNITS: MM	SCALE: 1:1	CURRENT REV DESC: SEE REVISION HISTORY
FC = 0	GENERAL TOLERANCES (UNLESS SPECIFIED)		molex
FP = 0	ANGULAR TOL ± 5'		QSFP-DD TO 2-ZQSFP+ 56G CABLE ASSEMBLY
DIVISIONAL SYMBOLS	4 PLACES ±		PRODUCT CUSTOMER DRAWING
	3 PLACES ±	STATUS: Production	
	2 PLACES ±	DRWN: Naveen R 2026-06-04	DOCUMENT NUMBER: 2033660001 / DOC TYPE: PSD / DOC PART: 000 / REVISION: U
	1 PLACE ±	CHK'D: Chiranjeevi Auvrav Simha M V 2026-06-08	
	0 PLACES ±	APPR: Srikanth Ramappa 2026-06-22	
	DRAFT WHERE APPLICABLE MUST REMAIN WITHIN DIMENSIONS	THIRD ANGLE PROJECTION / DRAWING: D-SIZE / SERIES: 203366	MATERIAL NUMBER: SEE P/N TABLE / CUSTOMER: GENERAL MARKET / SHEET NUMBER: 3 OF 6

CABLE LABEL

FROM SHEET 1

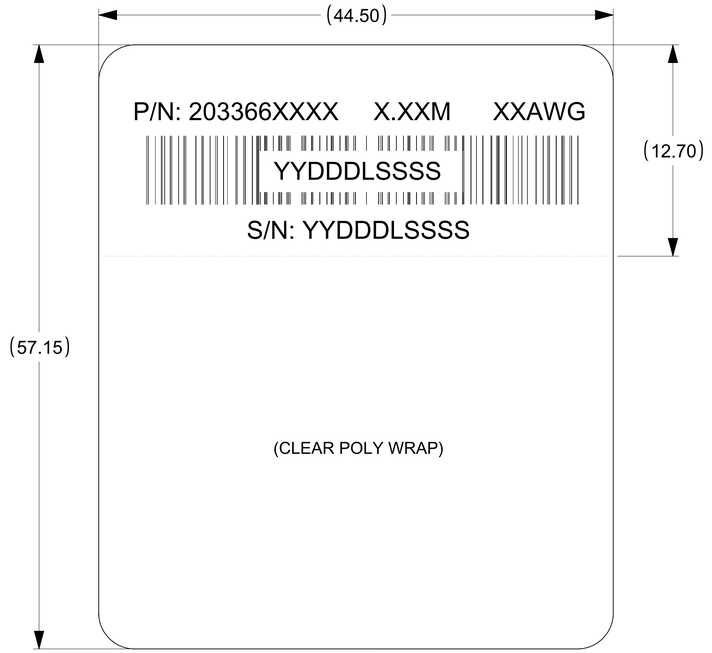

LEG ID LABEL

FROM SHEET 1

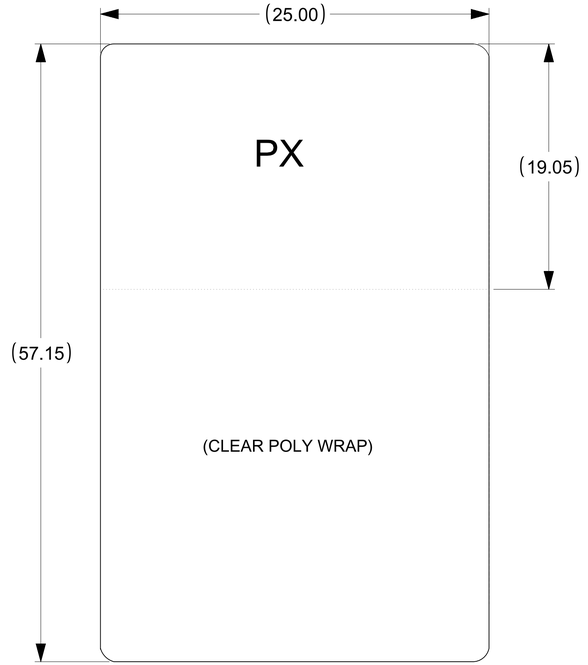

PX: P2 OR P3

SPEED LABEL

FROM SHEET 1

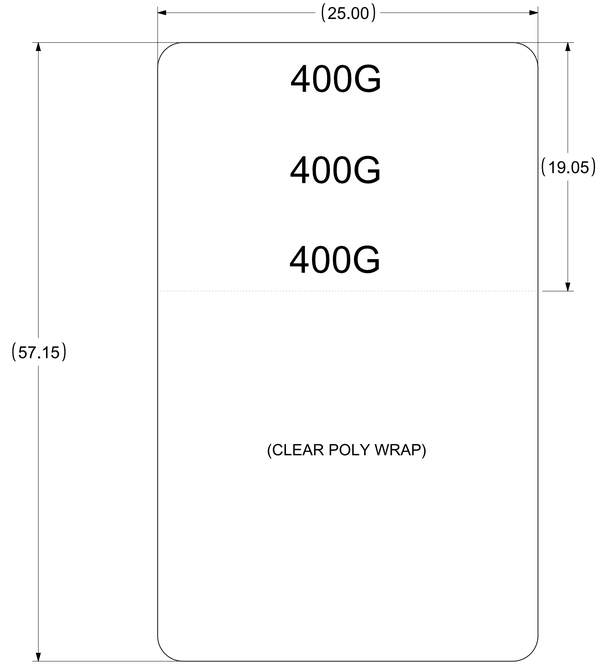

P/N: 203366XXXX - MOLEX PART NUMBER (SEE P/N TABLE)

X.XXM - CABLE LENGTH IN METERS (EXAMPLES - 0.50M, 1.00M, 1.50M)

XXAWG - CABLE SIZE IN AWG

SN : YYDDDLSSSS
YY = LAST TWO DIGIT OF THE YEAR
DDD = 3 DIGIT JULIAN DAY OF THE YEAR
L = LOCATION
1 = US
2 = MEXICO
3 = CHINA
4 = PHILIPPINES
5 = MALAYSIA
6 = SINGAPORE
7 = VIETNAM
SSSS = 4 DIGIT BASE30 SERIALIZATION 0000-YYYY
(0-9,A-Y EXCLUDING I,O,Q,S,X)

THIS DRAWING CONTAINS INFORMATION THAT IS PROPRIETARY TO MOLEX ELECTRONIC TECHNOLOGIES, LLC AND SHOULD NOT BE USED WITHOUT WRITTEN PERMISSION

FUNCTIONAL SYMBOLS	FA = 0, FC = 0, FD = 0
DIVISIONAL SYMBOLS	
DIMENSION UNITS	MM
SCALE	1:1
GENERAL TOLERANCES (UNLESS SPECIFIED)	
ANGULAR TOL	± 5"
4 PLACES	±
3 PLACES	±
2 PLACES	±
1 PLACE	±
0 PLACES	±
DRAFT WHERE APPLICABLE MUST REMAIN WITHIN DIMENSIONS	
CURRENT REV DESC: SEE REVISION HISTORY	
STATUS:	Production
DRWN:	Naveen R 2026-06-04
CHK'D:	Chiranjeevi Auvrav Simha M V 2026-06-08
APPR:	Srikanth Ramappa 2026-06-22

molex

QSFP-DD TO 2-ZQSFP+ 56G CABLE ASSEMBLY

PRODUCT CUSTOMER DRAWING

DOCUMENT NUMBER	DOC TYPE	DOC PART	REVISION
2033660001	PSD	000	U

THIRD ANGLE PROJECTION	DRAWING	SERIES	MATERIAL NUMBER	CUSTOMER	SHEET NUMBER
	D-SIZE	203366	SEE P/N TABLE	GENERAL MARKET	4 OF 6

MOLEX P/N	LENGTH (M)	TOLERANCE(M)	AWG
**2033661005	0.50	+/- 0.05	30
2033661010	1.00	+/- 0.05	30
2033661015	1.50	+/- 0.08	30
2033661020	2.00	+/- 0.08	30
*2033661025	2.50	+/- 0.08	30
**2033663005	0.50	+/- 0.05	28
2033663010	1.00	+/- 0.05	28
2033663015	1.50	+/- 0.08	28
2033663020	2.00	+/- 0.08	28
2033663025	2.50	+/- 0.08	28
2033663030	3.00	+/- 0.08	26
*2033663535	3.50	+/- 0.08	26

*THE LENGTH AND AWG LISTED IN THE TABLE ABOVE ARE PENDING FOR ELECTRICAL AND MECHANICAL QUALIFICATION AND ARE SUBJECT TO CHANGE

**LENGTHS UNDER 1.0M MAY NOT MEET ALL IEEE802.3cd SPEC

THIS DRAWING CONTAINS INFORMATION THAT IS PROPRIETARY TO MOLEX ELECTRONIC TECHNOLOGIES, LLC AND SHOULD NOT BE USED WITHOUT WRITTEN PERMISSION

FUNCTIONAL SYMBOLS: FA = 0; FC = 0; FP = 0

DIVISIONAL SYMBOLS

DIMENSION UNITS	SCALE
MM	1:1

GENERAL TOLERANCES (UNLESS SPECIFIED)

ANGULAR TOL	± 5'
4 PLACES	±
3 PLACES	±
2 PLACES	±
1 PLACE	±
0 PLACES	±

DRAFT WHERE APPLICABLE MUST REMAIN WITHIN DIMENSIONS

CURRENT REV DESC: SEE REVISION HISTORY

STATUS: Production

DRWN:	Naveen R	2026-06-04
CHK'D:	Chiranjeevi Auvrav Simha M V	2026-06-08
APPR:	Srikanth Ramappa	2026-06-22

THIRD ANGLE PROJECTION | DRAWING: D-SIZE | SERIES: 203366

molex

QSFP-DD TO 2-ZQSFP+ 56G CABLE ASSEMBLY

PRODUCT CUSTOMER DRAWING

DOCUMENT NUMBER	DOC TYPE	DOC PART	REVISION
2033660001	PSD	000	U

MATERIAL NUMBER	CUSTOMER	SHEET NUMBER
SEE P/N TABLE	GENERAL MARKET	5 OF 6

REVISION HISTORY

DATE (YYYY/MM/DD)	REV	DESCRIPTION
2022/07/06	M	SHEET 4, ZONE F11: TEXT P1 REMOVED FROM LEG ID LABEL
2024/09/25	N	SHEET 1, ZONE B18: ADDED PCB MATERIAL IN NOTES
		SHEET 2, ZONE C16: UPDATED CABLE OD, BEND RADIUS & BEND SPACE WITH QUALIFIED VALUES
		SHEET 2, ZONE B16 : REMOVED CAUTION NOTE
		SHEET 4, ZONE F6 : REMOVED CAUTION NOTE
2025/07/07	P	SHEET 1, ZONE L19 : UPDATED TOLERANCE AS MER MSA
		SHEET 1, ZONE B18 : ADDED JACKET MATERIAL IN NOTES
		SHEET 4, ZONE D17 : ADDED 5.6 & 7 LOCATIONS FOR LABEL
		SHEET 4: ADDED NEW PN-2033663535 IN PN TABLE
2026/02/25	R	SHEET 1, ZONE D18 : DELETED NOTE 1,2 & 4
		SHEET 1, ZONE G3 & K3 : UPDATED BACKSHELL DIMENSION TOLERANCE AS PER MSA
		SHEET 1 : REMOVED PCB VIEWING HOLE VIEWS
		SHEET 3 : MOVED PINOUT NUMBERING VIEWS TO SHEET 3 FROM SHEET 2
		SHEET 5 : MOVED PN TABLE TO SHEET 5
		SHEET 5 : ADDED 2033661025 TO P/N TABLE
2026/02/27	T	SHEET 5 : ADDED PENDING QUALIFICATION STATUS FOR 2033661025
2026/06/08	U	SHEET 1 ,ZONE H13: UPDATED EXPANDO DISTANCE FROM 180 TO 210

THIS DRAWING CONTAINS INFORMATION THAT IS PROPRIETARY TO MOLEX ELECTRONIC TECHNOLOGIES, LLC AND SHOULD NOT BE USED WITHOUT WRITTEN PERMISSION

FUNCTIONAL SYMBOLS
FA = 0
FC = 0
FP = 0
DIVISIONAL SYMBOLS

DIMENSION UNITS	SCALE
MM	1:1

GENERAL TOLERANCES (UNLESS SPECIFIED)

ANGULAR TOL	± 5"
4 PLACES	±
3 PLACES	±
2 PLACES	±
1 PLACE	±
0 PLACES	±

DRAFT WHERE APPLICABLE MUST REMAIN WITHIN DIMENSIONS

CURRENT REV DESC: SEE REVISION HISTORY

STATUS: Production

DRWN:	Naveen R	2026-06-04
CHK'D:	Chiranjeevi Auvrav Simha M V	2026-06-08
APPR:	Srikanth Ramappa	2026-06-22

molex

QSFP-DD TO 2-ZQSFP+ 56G CABLE ASSEMBLY

PRODUCT CUSTOMER DRAWING

DOCUMENT NUMBER	DOC TYPE	DOC PART	REVISION
2033660001	PSD	000	U

THIRD ANGLE PROJECTION	DRAWING	SERIES	MATERIAL NUMBER	CUSTOMER	SHEET NUMBER
	D-SIZE	203366	SEE P/N TABLE	GENERAL MARKET	6 OF 6