

NOTES:
1. MATERIALS
   BACKSHELLS - NICKEL PLATED ZINC
   DE-LATCH PULL - NYLON
   PCB - LAMINATE MATERIAL, UL94 V-0
   RIVETS - STAINLESS STEEL
2. IMPEDANCE - 100 OHMS DIFFERENTIAL, PASSIVE
3. PULL TO RELEASE, PLUNGER STYLE LATCH
4. EACH ASSEMBLY HAS A SERIAL ID
5. RoHS COMPLIANT, NO EXEMPTIONS.

THIS DRAWING CONTAINS INFORMATION THAT IS PROPRIETARY TO MOLEX ELECTRONIC TECHNOLOGIES, LLC AND SHOULD NOT BE USED WITHOUT WRITTEN PERMISSION

DIMENSION UNITS	SCALE
MM	NTS

GENERAL TOLERANCES (UNLESS SPECIFIED)

ANGULAR TOL	± °
4 PLACES	±
3 PLACES	±
2 PLACES	±
1 PLACE	±
0 PLACES	±

DRAFT WHERE APPLICABLE MUST REMAIN WITHIN DIMENSIONS

CURRENT REV DESC: REMOVED OBSOLETED PART NUMBERS AS PER PCN#517487

STATUS: Production

DRWN:	J Sanat Kumar	2025-11-25
CHK'D:	Ganesh Rao B	2026-01-23
APPR:	Gurunandan GA	2026-01-23

molex

SFP-DD 56G PASSIVE CABLE ASSY

PRODUCT CUSTOMER DRAWING

DOCUMENT NUMBER	DOC TYPE	DOC PART	REVISION
2049620001	PSD	000	F1

THIRD ANGLE PROJECTION	DRAWING	SERIES	MATERIAL NUMBER	CUSTOMER	SHEET NUMBER
	D-SIZE	204962	SEE P/N TABLE	GENERAL MARKET	1 OF 3

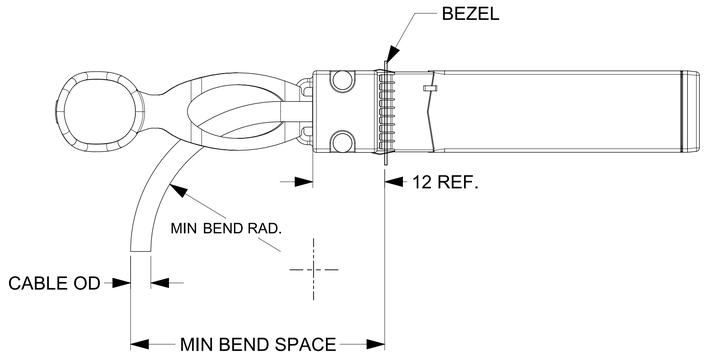

CABLE AWG	O.D.	MIN BEND RADIUS (mm)	MIN BEND SPACE (mm)
30	5.89	30	48
28	6.48	33	51
26	7.62	38.5	56.5

WIRING DIAGRAM					
P1 END			P2 END		
PAD	SIGNAL			PAD	SIGNAL
02	Tx_Fault	NC	NC	02	Tx_Fault
03	Tx_Disable	NC	NC	03	Tx_Disable
04	SDA	☐	☐	04	SDA
05	SCL	☐	☐	05	SCL
06	Mod_ABS	NC	NC	06	Mod_ABS
07	RS0	NC	NC	07	RS0
08	Rx_LOS	NC	NC	08	Rx_LOS
09	RS1	NC	NC	09	RS1
12	RD-	<----		19	TD-
13	RD+	<----		18	TD+
15	VccR	NC	NC	15	VccR
16	VccT	NC	NC	16	VccT
18	TD+	---->		13	RD+
19	TD-	---->		12	RD-
22	RSVD	NC	NC	29	RSVD
23	RSVD	NC	NC	28	RSVD
25	RSVD	NC	NC	36	RSVD
26	RSVD	NC	NC	35	RSVD
28	RSVD	NC	NC	23	RSVD
29	RSVD	NC	NC	22	RSVD
32	RD1-	<----		39	TD1-
33	RD1+	<----		38	TD1+
35	RSVD	NC	NC	26	RSVD
36	RSVD	NC	NC	35	RSVD
38	TD1+	---->		33	RD1+
39	TD1-	---->		32	RD1-

LEGEND:
----> = THRU LINES
NC = NOT CONNECTED
☐ = CONNECTION TO A DEVICE ON THE PCB
SINGAL GROUND PADS: 1, 10, 11, 14, 17, 20, 21, 24, 27, 30, 31, 34, 37, 40

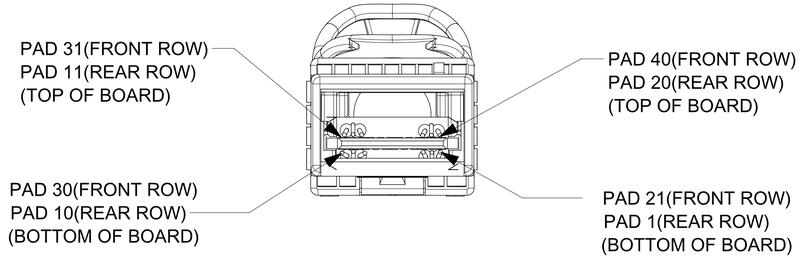

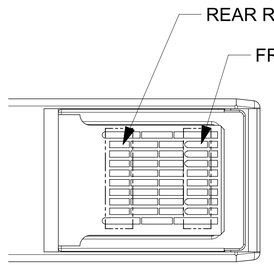

(BOTTOM OF BOARD SHOWN)

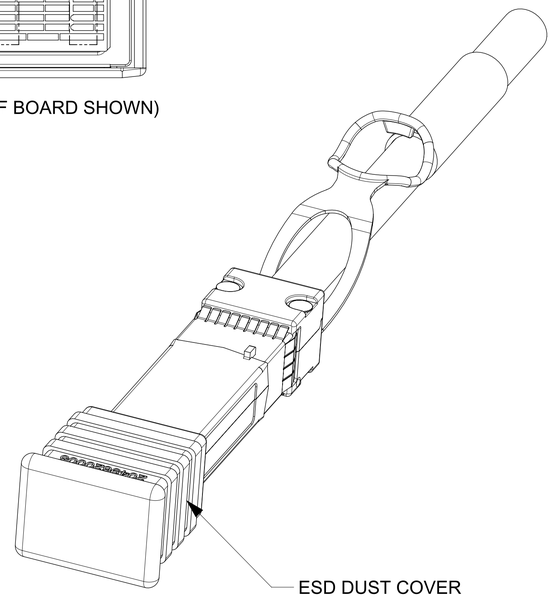

THIS DRAWING CONTAINS INFORMATION THAT IS PROPRIETARY TO MOLEX ELECTRONIC TECHNOLOGIES, LLC AND SHOULD NOT BE USED WITHOUT WRITTEN PERMISSION

DIMENSION UNITS	MM
SCALE	NTS
GENERAL TOLERANCES (UNLESS SPECIFIED)	
ANGULAR TOL	± °
4 PLACES	±
3 PLACES	±
2 PLACES	±
1 PLACE	±
0 PLACES	±
DRAFT WHERE APPLICABLE MUST REMAIN WITHIN DIMENSIONS	

CURRENT REV DESC: REMOVED OBSOLETED PART NUMBERS AS PER PCN#517487

STATUS: Production
DRWN: J Sanat Kumar 2025-11-25
CHK'D: Ganesh Rao B 2026-01-23
APPR: Gurunandan GA 2026-01-23

THIRD ANGLE PROJECTION | DRAWING: D-SIZE | SERIES: 204962

molex

SFP-DD 56G PASSIVE CABLE ASSY

PRODUCT CUSTOMER DRAWING

DOCUMENT NUMBER	DOC TYPE	DOC PART	REVISION
2049620001	PSD	000	F1

MATERIAL NUMBER	CUSTOMER	SHEET NUMBER
SEE P/N TABLE	GENERAL MARKET	2 OF 3

PART NUMBER TABLE

PART NUMBER	LENGTH	TOL.	AWG
2049621051	0.5M	±0.03M	30
2049621101	1.0M	±0.05M	30
2049621151	1.5M	±0.05M	30
2049621201	2.0M	±0.05M	30
2049622251	2.5M	±0.05M	28
2049623301	3.0M	±0.05M	26

NOTES:
CUSTOM CABLE LENGTH AND GAUGE AVAILABLE UPON REQUEST

CABLE ID LABEL

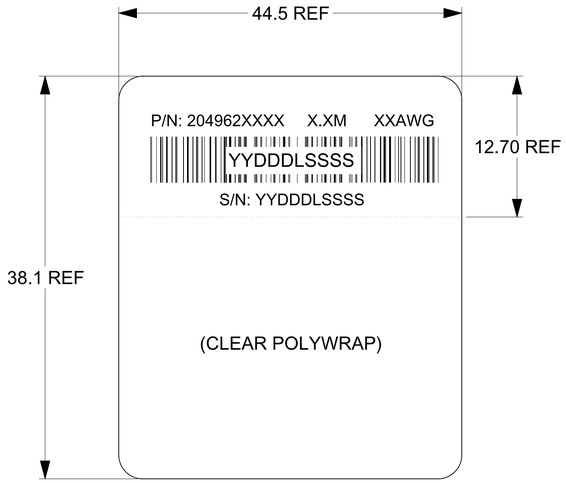

P/N: 204962XXXX - MOLEX PART NUMBER (SEE P/N TABLE)

X.XM - CABLE LENGTH IN METERS (EXAMPLES - 0.5M, 1.0M, 1.5M, SEE P/N TABLE)

XXAWG - CABLE SIZE IN AWG (SEE P/N TABLE)

S/N: YYDDDLSSSS - SERIAL NUMBER
YY = YEAR, THE LAST TWO DIGITS OF YEAR
DDD = DAY OF THE YEAR
L = LOCATION
1 - USA
2 - MEXICO
3 - CHINA
4 - PHILIPPINES
SSSS = SERIAL NUMBER (0001-9999)

THIS DRAWING CONTAINS INFORMATION THAT IS PROPRIETARY TO MOLEX ELECTRONIC TECHNOLOGIES, LLC AND SHOULD NOT BE USED WITHOUT WRITTEN PERMISSION

DIMENSION UNITS	MM
SCALE	NTS
GENERAL TOLERANCES (UNLESS SPECIFIED)	
ANGULAR TOL	± °
4 PLACES	±
3 PLACES	±
2 PLACES	±
1 PLACE	±
0 PLACES	±
DRAFT WHERE APPLICABLE MUST REMAIN WITHIN DIMENSIONS	

CURRENT REV DESC: REMOVED OBSOLETED PART NUMBERS AS PER PCN#517487

STATUS: Production
DRWN: J Sanat Kumar 2025-11-25
CHK'D: Ganesh Rao B 2026-01-23
APPR: Gurunandan GA 2026-01-23

THIRD ANGLE PROJECTION | DRAWING: D-SIZE | SERIES: 204962

molex

SFP-DD 56G PASSIVE CABLE ASSY

PRODUCT CUSTOMER DRAWING

DOCUMENT NUMBER	DOC TYPE	DOC PART	REVISION
2049620001	PSD	000	F1

MATERIAL NUMBER	CUSTOMER	SHEET NUMBER
SEE P/N TABLE	GENERAL MARKET	3 OF 3