General Description:

The LWS6004A5 uses advanced SGT technology and design to provide excellent $R_{DS(ON)}$ with low gate charge. It can be used in a wide variety of applications. The package form is TO-263, which accords with the ROHS standard and Halogen Free standard.

V_{DSS}	-60	V
I_D	-145	A
P_D	183	W
$R_{DS(ON)\ TYPE}$	3.5	mΩ

Marking and Pin Assignment

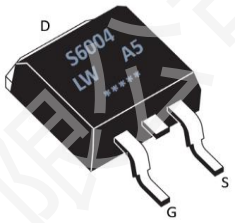

Inner Equivalent Principium Chart

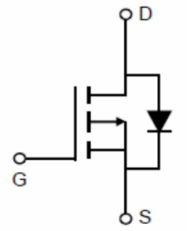

Features:

- Fast Switching
- Low Gate Charge and $R_{DS(ON)}$
- Low Reverse transfer capacitances

Applications:

- Battery switching application
- Hard switched and high frequency circuits
- Power Management

100% DVDS Tested

100% Avalanche Tested

RoHS HF

Package Marking and Ordering Information:

Marking	Part Number	Package	Packing	Qty.
S6004/LW A5/D.C.	LWS6004A5	TO-263	Reel	800Pcs

Absolute Maximum Ratings:

Symbol	Parameter		Value	Units
V_{DSS}	Drain-to-Source Voltage		-60	V
I_D	Continuous Drain Current	T_C=25℃	-145	A
	Continuous Drain Current	T_C=100℃	-92	A
I_{DM}[a1]	Pulsed Drain Current		-580	A
V_{GS}	Gate-to-Source Voltage		±20	V
P_D	Power Dissipation		183	W
E_{AS}[a2]	Single pulse avalanche energy		1960	mJ
T_J, T_{STG}	Operating Junction and Storage Temperature Range		150, -55 to 150	℃
T_L	Maximum Temperature for Soldering		260	℃

Thermal Characteristics:

Symbol	Parameter	Value	Units
$R_{\theta JC}$	Thermal Resistance, Junction-to-Case	0.68	℃/W
$R_{\theta JA}$[a3]	Thermal Resistance, Junction-to-Ambient	60	℃/W

Electrical Characteristic (T_J = 25 °C, unless otherwise specified):

Static Characteristics						
Symbol	Parameter	Test Conditions	Value			Units
			Min.	Typ.	Max.	
V_{DSS}	Drain to Source Breakdown Voltage	V_{GS}=0V, I_D=-250μA	-60	--	--	V
I_{DSS}	Drain to Source Leakage Current	V_{DS}=-60V, V_{GS}=0V	--	--	-1.0	μA
$I_{GSS(F)}$	Gate to Source Forward Leakage	V_{GS}=-20V, V_{DS}=0V	--	--	-100	nA
$I_{GSS(R)}$	Gate to Source Reverse Leakage	V_{GS}=+20V, V_{DS}=0V	--	--	100	nA
$V_{GS(TH)}$	Gate Threshold Voltage	V_{DS}=V_{GS}, I_D=-250μA	-2.0	-2.3	-2.7	V
$R_{DS(ON)}$	Drain-to-Source On-Resistance	V_{GS}=-10V, I_D=-20A	--	3.5	4.2	mΩ

Dynamic Characteristics						
Symbol	Parameter	Test Conditions	Value			Units
			Min.	Typ.	Max.	
C_{iss}	Input Capacitance	V_{GS} =0V V_{DS} =-30V f =1.0MHz	--	9123	--	pF
C_{oss}	Output Capacitance		--	1583	--	
C_{rss}	Reverse Transfer Capacitance		--	86	--	
R_G	Gate resistance	V_{GS}=0V,V_{DS}=0V,f=1MHz	--	2.5	--	Ω

Resistive Switching Characteristics						
Symbol	Parameter	Test Conditions	Value			Units
			Min.	Typ.	Max.	
$t_{d(ON)}$	Turn-on Delay Time	I_D =-20A V_{DS} =-30V V_{GS} =-10V R_G =3.0Ω	--	70	--	ns
t_r	Rise Time		--	45	--	
$t_{d(OFF)}$	Turn-Off Delay Time		--	165	--	
t_f	Fall Time		--	50	--	
Q_g	Total Gate Charge	V_{GS} =-10V V_{DS} =-30V I_D =-20A	--	136	--	nC
Q_{gs}	Gate to Source Charge		--	28	--	
Q_{gd}	Gate to Drain Charge		--	22	--	

Source-Drain Diode Characteristics						
Symbol	Parameter	Test Conditions	Value			Units
			Min.	Typ.	Max.	
I_S	Diode Forward Current	T_C =25 °C	--	--	-145	A
I_{SM}	Diode Pluse Current		--	--	-580	A
V_{SD}	Diode Forward Voltage	I_S=-20A, V_{GS}=0V	--	--	-1.2	V

a1：Repetitive rating; pulse width limited by maximum junction temperature

a2：V_{DD}=-70V,L=5.0mH, R_G=25Ω, Starting T_j=25℃

a3：Device on 40 mm x 40 mm x 1.5 mm epoxy PCB FR4 with 6 cm^2 (one layer, 70 μm thick) copper area for drain connection.

Characteristics Curve：

Figure 1: Typ. output characteristics

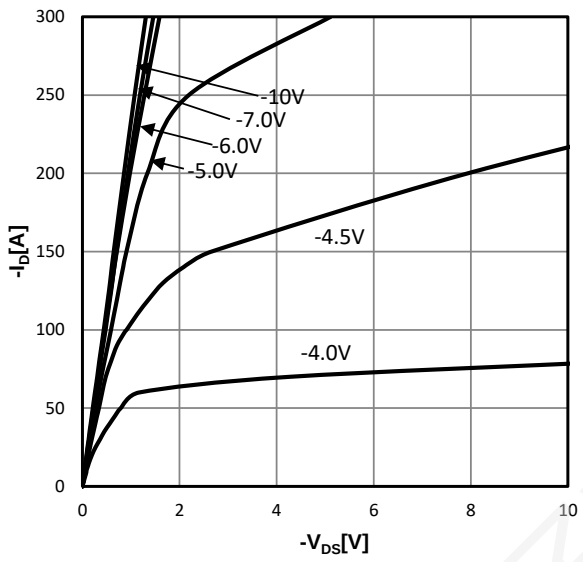

$I_D=f(V_{DS})$, T_j=25 °C; parameter: V_{GS}

Figure 2: Typ. drain-source on resistance

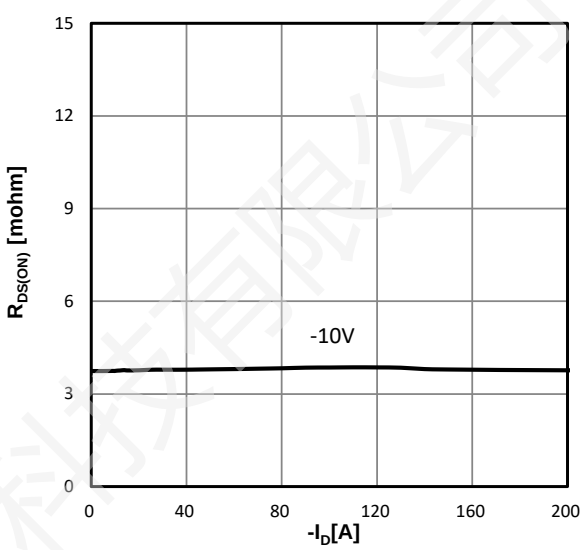

$R_{DS(on)}=f(I_D)$, T_j=25 °C; parameter: V_{GS}

Figure 3: Typ. transfer characteristics

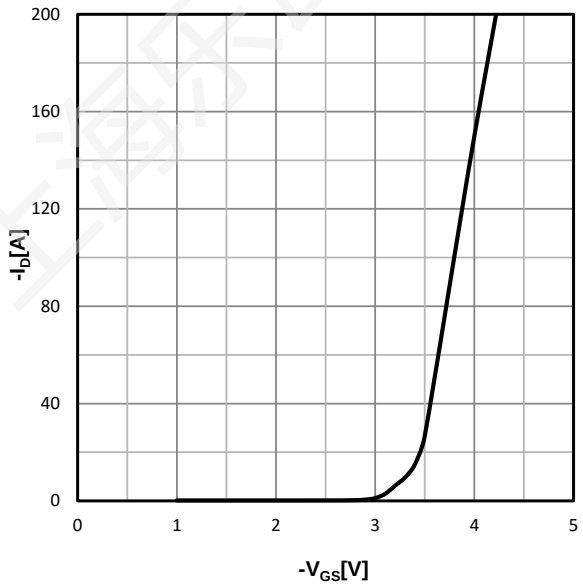

$I_D=f(V_{GS})$, $|V_{DS}|>2|I_D|R_{DS}(on)max$;

Figure 4: drain-source on resistance

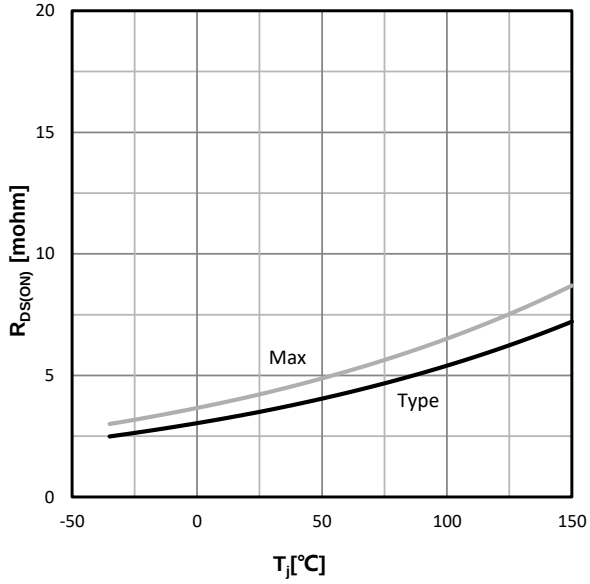

$R_{DS(on)}=f(T_j)$, I_D=-20A, V_{GS}=-10V;

Figure 5: Typ. gate threshold voltage

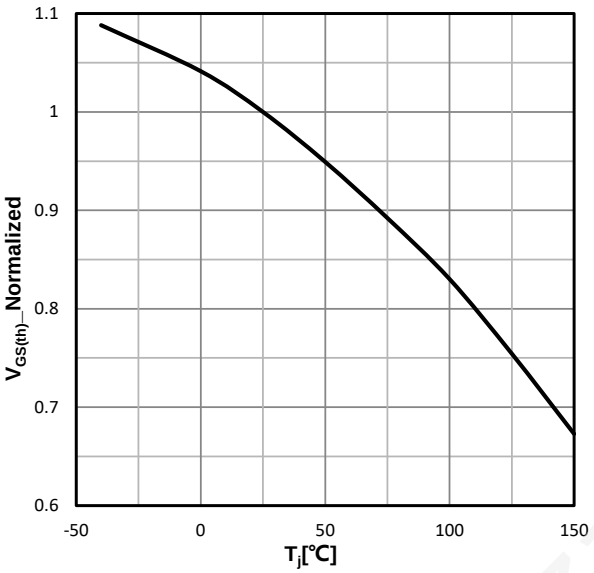

$V_{GS}=f(T_j)$, $V_{GS}=V_{DS,}$ I_D=-250μA;

Figure 6: Drain-source breakdown voltage

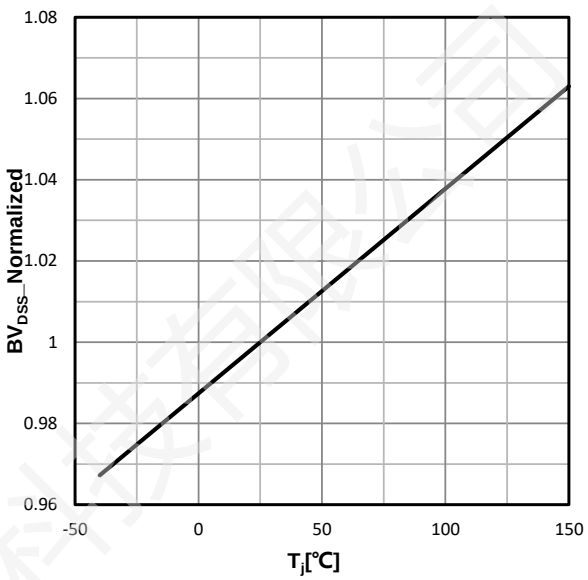

$V_{BR(DSS)}=f(T_j)$; I_D=-250μA;

Figure 7: Typ. gate charge

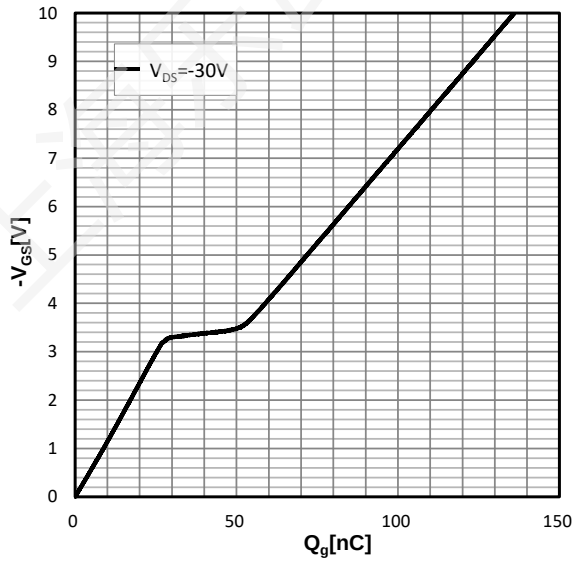

$V_{GS}=f(Q_g)$, I_D=-20A, T_j=25 °C; parameter: V_{DS}

Figure 8: Typ. Capacitances

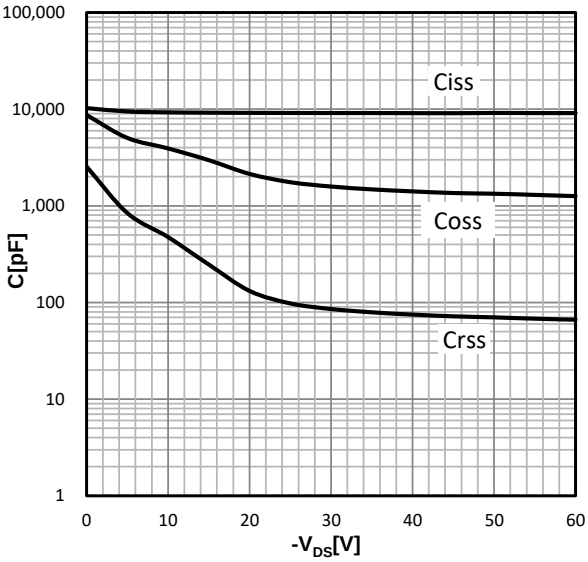

$C=f(V_{DS})$; V_{GS}=0V; f=1.0 MHz;

Figure 9: Power dissipation	Figure 10:Drain current
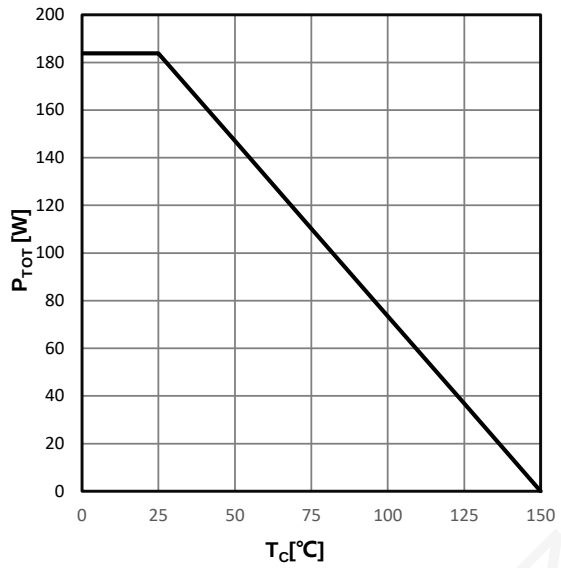	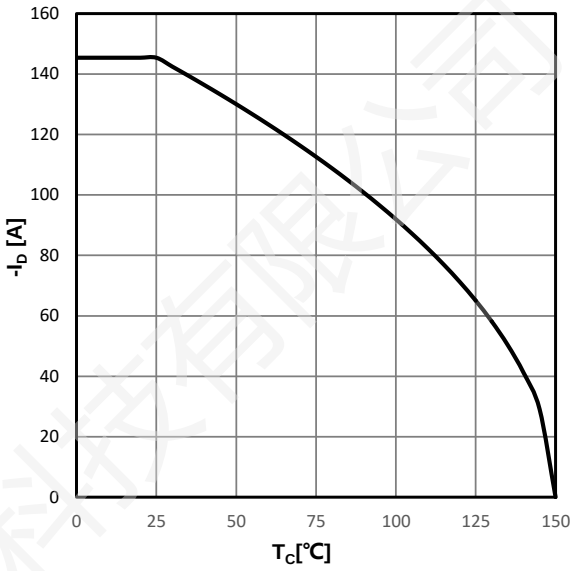
$P_{tot}=f(T_C)$;	$I_D=f(T_C)$;

Figure 11: Safe operating area	Figure 12: Typ. forward characteristics
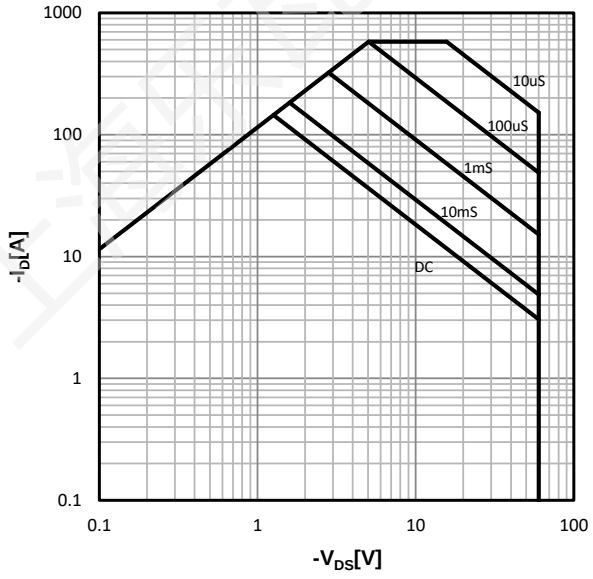	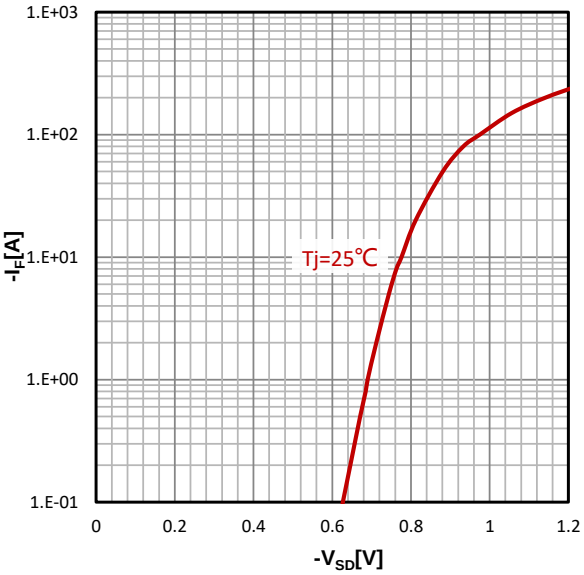
$I_D=f(V_{DS})$; T_C=25 °C; D=0; parameter: tp	$I_F=f(V_{SD})$;

Figure 13: Max. Transient Thermal Impedance

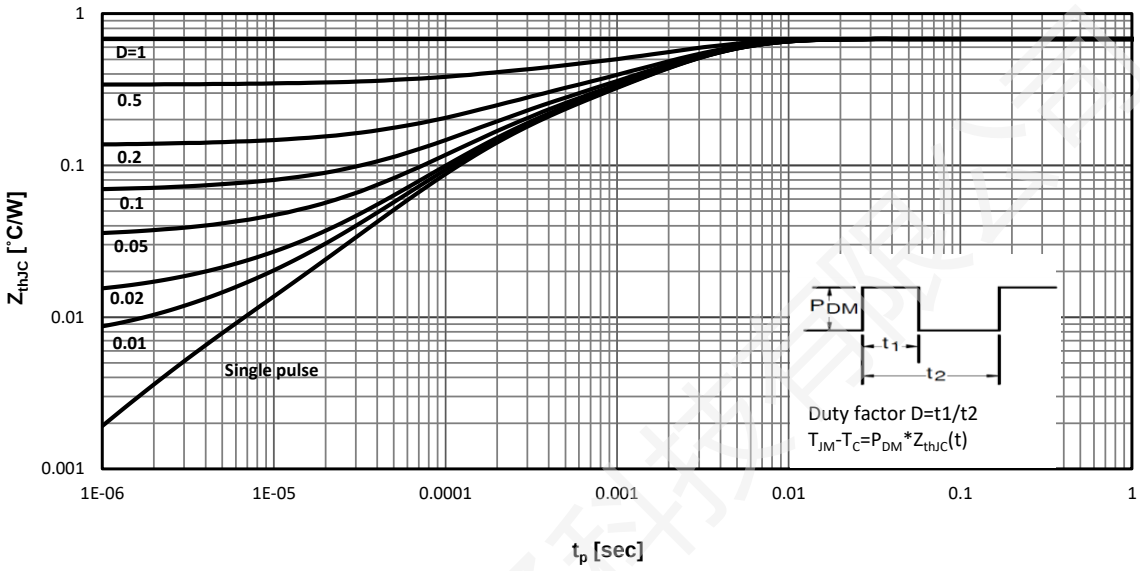

$Z_{thJC}=f(t_p)$; parameter: D

Test Circuit & Waveform:

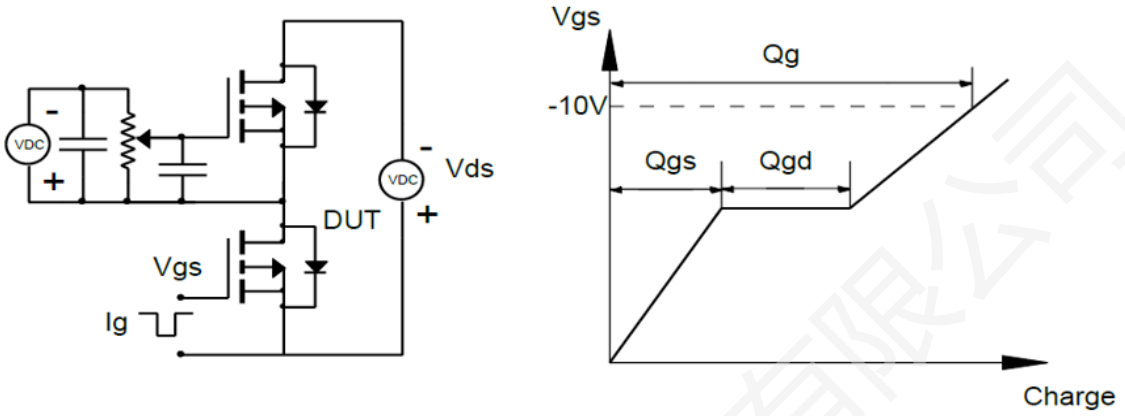

Figure 14: Gate Charge Test Circuit & Waveform

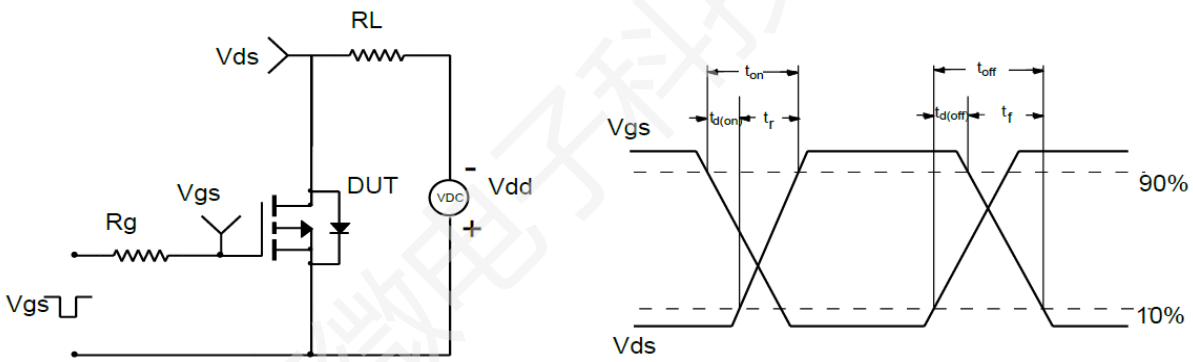

Figure 15: Resistive Switching Test Circuit & Waveforms

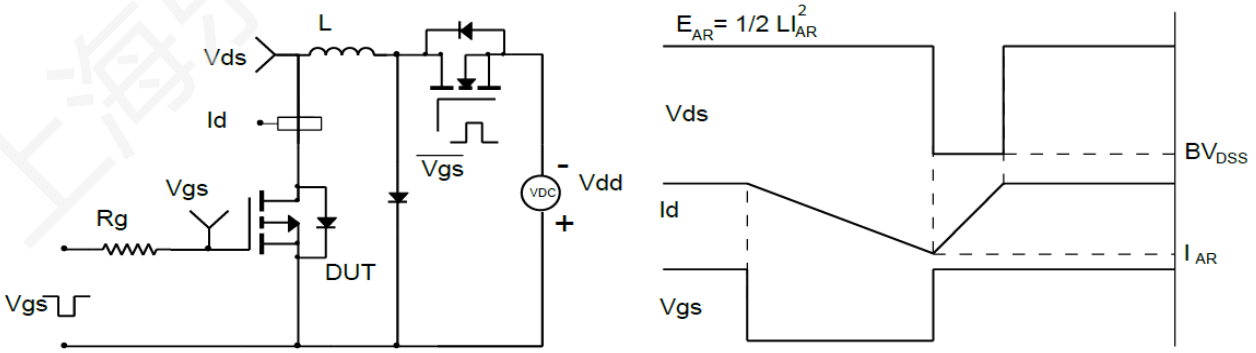

Figure 16: Unclamped Inductive Switching Test Circuit & Waveforms

Package Outline:

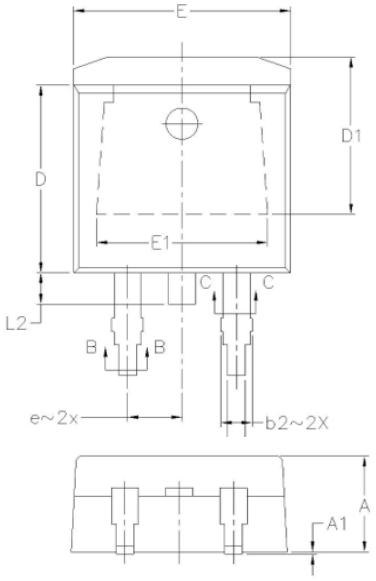

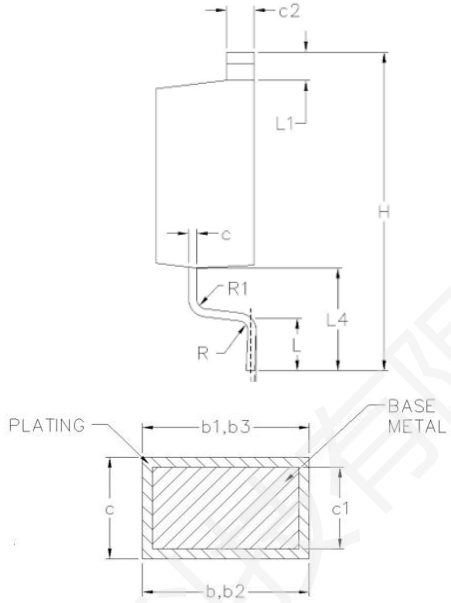

Symbol	COMMON			
	MM		INCH	
	Min	Max	Min	Max
A	4.064	4.826	0.160	0.190
A1	0.000	0.254	0.000	0.010
b	0.508	0.991	0.020	0.039
b1	0.508	0.889	0.020	0.035
b2	1.143	1.778	0.045	0.070
b3	1.143	1.727	0.045	0.068
c	0.381	0.737	0.015	0.029
c1	0.381	0.584	0.015	0.023
c2	1.143	1.651	0.045	0.065
D	8.382	9.652	0.330	0.380
D1	6.858	——	0.270	——
E	9.652	10.668	0.380	0.420
E1	6.223	——	0.245	——
e	2.540 BSC		0.100 BSC	
H	14.605	15.875	0.575	0.625
L	1.778	2.794	0.070	0.110
L1	——	1.676	——	0.066
L2	——	1.778	——	0.070
L3	0.254 BSC		0.010 BSC	
L4	4.780	5.280	0.188	0.208
R	0.460 TYP		0.018 TYP	
R1	0.461 TYP		0.019 TYP	
θ	0°	8°	0°	8°

上海乐瓦微电子科技有限公司

Revision History:

Revison	Date	Descriptions
Rev 1.1	Aug.2025	Formal Version
Rev 1.0	Apr.2023	Initial Version

上海乐瓦微电子科技有限公司

Disclaimer:

- The product is not intended for use in applications that require extraordinary levels of quality and reliability, such as military, aviation/aerospace and life-support systems or other applications whose failure can be reasonably expected to result in serious physical or material damage.
- Lewa-Micro assumes no responsibility for equipment failures that result from using products at parameters that exceed, even momentarily, rated values (such as maximum ratings, operating condition ranges, or other parameters) listed in products specifications of any Lewa-Micro products described or contained herein.
- Specifications of any and all Lewa-Micro products described or contained herein stipulate the performance, characteristics, and functions of the described products in the independent state, and are not guarantees of the performance, characteristics, and functions of the described products as mounted in the customer's products or equipment. To verify symptoms and states that cannot be evaluated in an independent device, the customer should always evaluate and test devices mounted in the customer's products or equipment.
- Lewa-Micro strives to supply high-quality and high-reliability products. However, any and all semiconductor products have a certain probability of failure. It is possible that these probabilistic failures could give rise to accidents or events that could endanger human lives, that could give rise to smoke or fire, or that could cause damage to other property. When designing equipment, adopt safety measures so that these kinds of accidents or events cannot occur. Such measures including but not limited to protective circuits and error prevention circuits for safe design, redundant design, and structural design.
- To comply with the compliance requirements of relevant export control laws and regulations, if any Lewa-Micro product (including technical data and services) stated herein is subject to relevant export control laws and regulations, it is recommended that the customer apply for and obtain an export license from the competent authority in advance in accordance with the requirements of relevant laws, and do not conduct export activities without obtaining the license. If the customer fails to comply with the aforementioned compliance requirements, all legal liabilities arising therefrom shall be borne solely by the customer.
- To protect Lewa-Micro's intellectual property rights and the security of commercial information, without the prior written permission of Lewa-Micro, no part of this document shall be reproduced or disseminated in any form or by any means (including photocopying, recording, and other electronic or mechanical means, as well as various information storage and retrieval systems). For unauthorized reproduction or dissemination, Lewa-Micro reserves the right to pursue legal liability.
- Information (including circuit diagrams and circuit parameters) herein is for example only; it is not guaranteed for volume production. Lewa-Micro believes information herein is accurate and reliable, but no guarantees are made or implied regarding its use or any infringements of intellectual property rights or other rights of third parties.
- Any and all information described or contained herein are subject to change without notice due to product/technology improvement, etc.

Mailing Address: Unit 02&04&05, 10th Floor, Building 5, No.666 Shengxia Road, No.122 Yindong Road,
China (Shanghai) Pilot Free Trade Zone
Shanghai Lewa Micro-electronics Technology Co., Ltd