Sep.1.2023 Copyright 2023 HIROSE ELECTRIC CO., LTD. All Rights Reserved.
In case of consideration for using Automotive equipment / device which demand high reliability, kindly contact our sales window

	△数 COUNT	訂正事項 DESCRIPTION OF REVISIONS	擔當 BY	檢圖 CHKD	年月日 DATE
1	1	RE-6-1150	K.I.Y	L.S.M	18. 07. 04
2	2	RE-6-1579	K.I.Y	L.S.M	20. 01. 23
△					. .

HRS DRAWING FOR REFERENCE

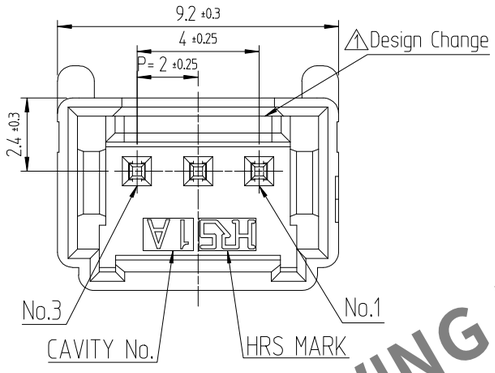

RECOMMENDED LAND PATTERN (FREE)

(PCB THICKNESS t=1.6mm)

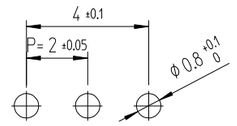

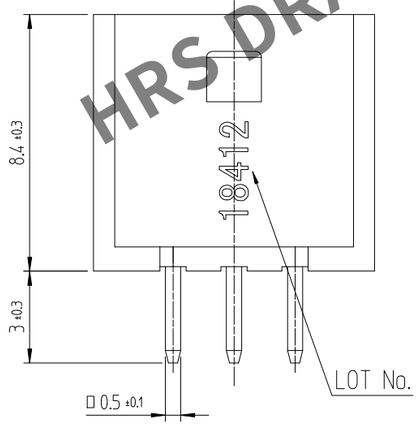

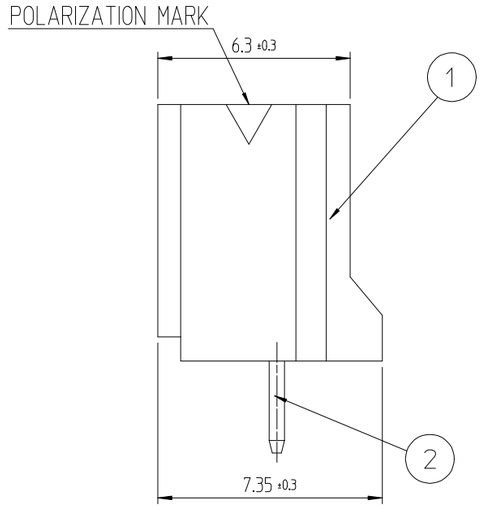

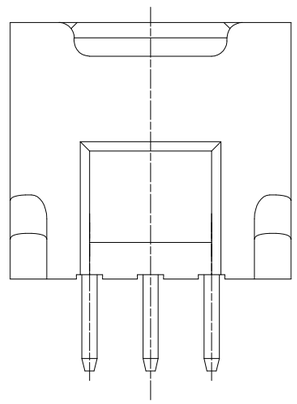

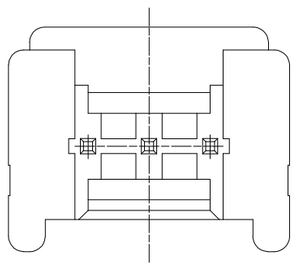

NOTE 1. 1PACK CONTAINS 100PCS.

2. ( )DIMENSIONS ARE ONLY REFERENCE.

△1 3. UL(File No. E132750) AUTHORIZATION ARTICLE.
C-UL(File No. E132750) AUTHORIZATION ARTICLE.

ENGAGEMENT FIGURE (2:1)

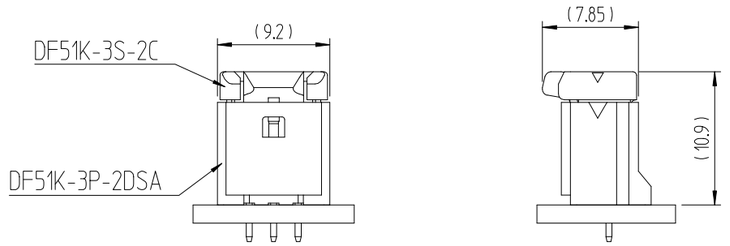

NO.	MATERIAL	FINISH,REMARKS
1	△1 PA66	UL94V-0, BLACK
2	BRASS	GOLD PLATING 0.1μm MIN, OVER NICKEL 0.5μm MIN

CODE NO. (OLD)	DRAWN	DESIGNED	CHECKED	APPROVED	RELEASED
	CHOI 17.12.22 J.S	CHOI 17.12.22 J.S	LIM 17.12.22 S.M	KANG 17.12.22 T.S	ENG 20. 02. 12 DEPT

SCALE 5:1 / UNITS mm	DRAWING NO. EDC3-632303	PART NO. DF51K-3P-2DSA (805)
	HRS HIROSE KOREA CO.,LTD.	CODE NO. CL 6652-0002-4-805

1/1