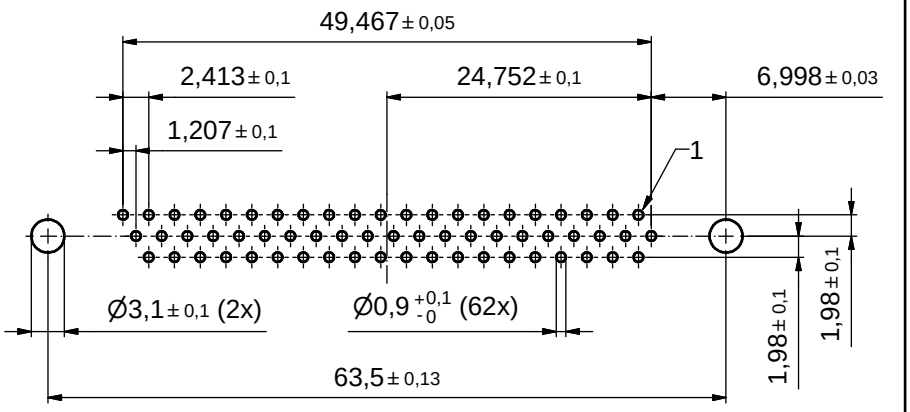

P.C.B. HOLE DRILLINGS
(P.C.B. TOP SIDE)

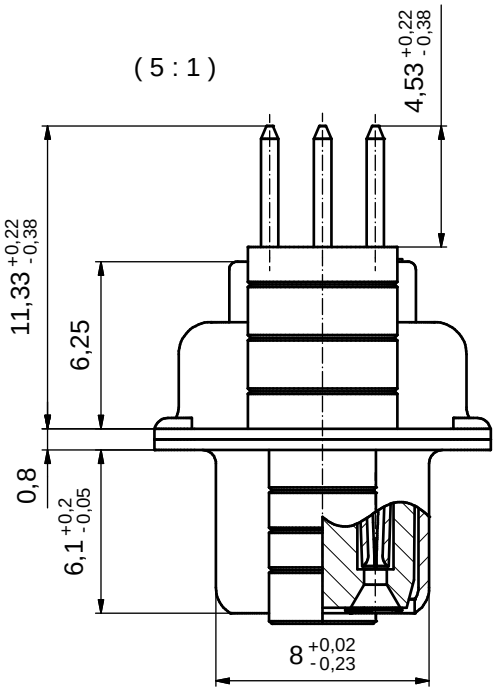

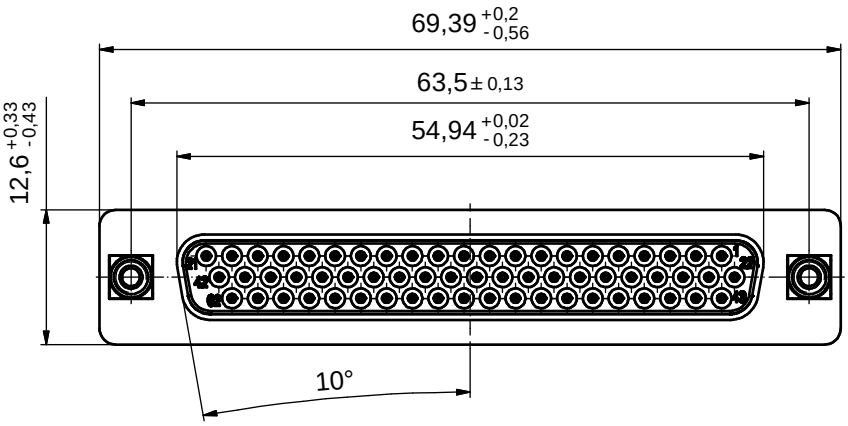

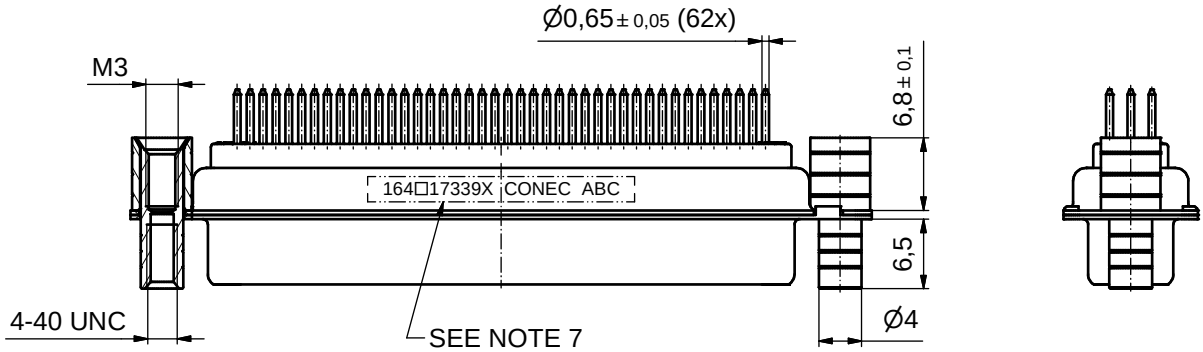

NOTES:

1. METALSHELLS: STEEL; min. 315µin TIN over 40-80µin NICKEL
2. INSULATORS: PBT GF UL 94 V-0, BLACK
3. CONTACTS: COPPER ALLOY; PLATING (SEE PART NO):
   - □ PLEASE ADD A for GOLD FLASH over NICKEL (PREFERRED TYPE)
   - □ PLEASE ADD B for 20µin HARD GOLD over min. 50µin NICKEL
   - □ PLEASE ADD C for 30µin HARD GOLD over min. 50µin NICKEL
4. THREADED REAR SPACERS / FRONT THREADED LOCKS:
   COPPER ALLOY; 200µin TIN over 80µin NICKEL
5. SLEEVES: COPPER ALLOY; min. 200µin TIN over 80µin NICKEL
6. MAXIMUM TORQUE VALUE FOR THREAD: 6 in.LB
7. CONNECTOR IS PART MARKED: 164□17339X CONEC ABC

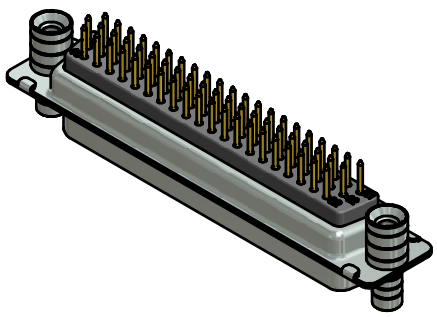

Directive 2002/95/EC RoHS compliant

THIS DRAWING MAY NOT BE COPIED OR REPRODUCED IN ANY WAY, AND MAY NOT BE PASSED ON TO A THIRD PARTY WITHOUT WRITTEN PERMISSION.
OWNERSHIP AND COPYRIGHT OF CONEC GmbH
DO NOT ALTER CAD DRAWING BY HAND

rev.	description	date	name
a	Original		

tolerance: dim. in mm

	date	name
drawn	21.11.12	Schmidt
appd.	21.11.12	Fischer
norm		
d-old		

scale: 2:1 (5:1)
material: SEE NOTES

title:
D-SUB HD FEMALE
62pos. SOLDER PIN STRAIGHT
with threaded rear spacer / front threaded lock

dwg no: 16K1A3144
DIN-A3
sh: 1

part no: 164□17339X (see note 3)