WWW.XYECONN.COM

REV.	Q'TY	ECN. NO.	APR.	DATE

PRELIMINARY
DESIGN IS SUBJECT TO CHANGE WITHOUT PRIOR NOTICE

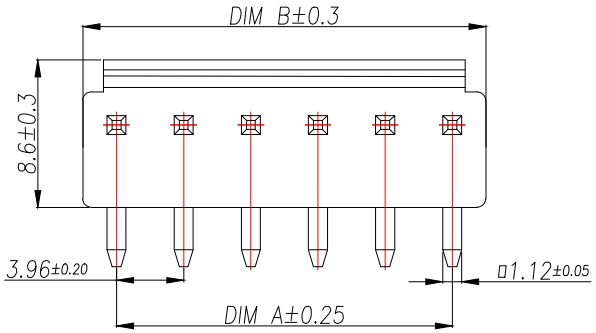

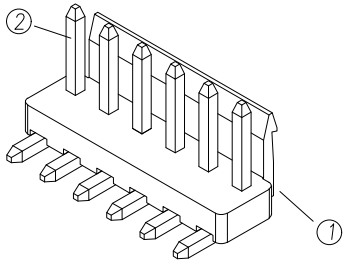

技术要求:

1、塑件材料:PA66(UL-94V-0)
2、接触件:黄铜镀锡
3、接触电阻:≤20mΩ
4、绝缘电阻:≥1000MΩ
5、额定电压:250V AC DC
6、额定电流:7.0A AC DC
7、耐压:能承受1000V AC/Min ute
8、工作温度:-25°~~+85°
9、可焊性试验:浸锡面积≥95%温度220$^{+5°}_{0}$,时间2.5±0.5秒
10、铅和镉等六大有害物质含量要符合环保要求

Part No	PIN	A	B
XY-VH3.96-2A21	2	3.96	7.92
XY-VH3.96-3A21	3	7.92	11.88
XY-VH3.96-4A21	4	11.88	15.84
XY-VH3.96-5A21	5	15.84	19.80
XY-VH3.96-6A21	6	19.80	23.76
XY-VH3.96-7A21	7	23.76	27.72
XY-VH3.96-8A21	8	27.72	31.68
XY-VH3.96-9A21	9	31.68	35.64
XY-VH3.96-10A21	10	35.64	39.60
XY-VH3.96-11A21	11	39.60	43.56
XY-VH3.96-12A21	12	43.56	47.52
XY-VH3.96-13A21	13	47.52	51.48
...	...	...	...
XY-VH3.96-20A21	20	(20-1)*3.96	20*3.96

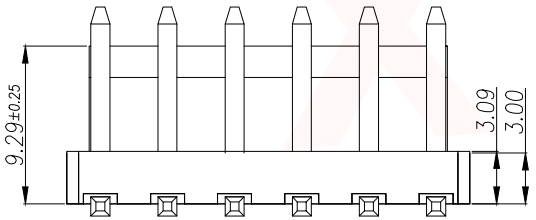

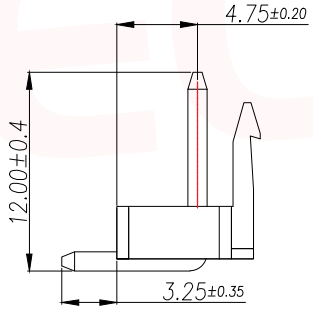

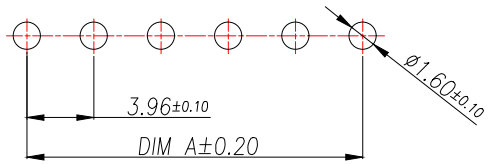

SUGGESTED PCB LAYOUT
(COMPONENT SIDE)

序号	名 称	材 料	数 量	附 注
2	Contact	Brass	n*1	电镀(镍):整个表面镀底镍30u"MIN,再 镀锡80u".MIN.
1	Wafer	PA66(UL94V-0)	1	白色

DIMENSION IN mm		厦门市辛译精密电子有限公司 Xiamen XinYi Xyeconn Electronics Co.,Ltd		
TOLERANCE UNLESS OTHERWISE SPECIFIED				
.X±0.35	X.°± 5°	APR. Alex	TITLE: WAFER 3.96mm 90° DIP	
.XX±0.25	.X°± 3°	CHK. Jack	DWG NO. XY-VH3.96-NA21	
.XXX±0.15	.XX°± 1°	DRA. Can	PROJ.	CUSTOMER DRAWING
			SIZE A4 / SCALE 1:1	SHEET 2/2 / REV. A

F-RD-18A