TECH PUBLIC
台舟电子

ESDAVLC6V1-1BM2

1-Line Bi-directional TVS Diode

www.sot23.com.tw

Features

- Ultra small package: 1.0x0.6x0.5mm
- Ultra low capacitance: 3pF typical
- Ultra low leakage: nA level
- Low operating voltage: ±5V
- Low clamping voltage
- 2-pin leadless package
- Complies with following standards:
- – IEC 61000-4-2 (ESD) immunity test
  Air discharge: ±25kV
  Contact discharge: ±20kV
- – IEC61000-4-5 (Lightning)4A (8/20 μs)
- RoHS Compliant
- Lead Finish: NiPdAu

Mechanical Characteristics

- Package: DFN1006-2 (0402)
- Lead Finish: Matte Tin
- Case Material: “Green” Molding Compound.
- Moisture Sensitivity: Level 3 per J-STD-020
- Terminal Connections: See Diagram Below
- Shipping Qty :10000pcs/7Inch Tape & Reel

Applications

- Smart Phone and Tablet PC
- TV and Set Top Box
- Wearable Devices
- PDA

Dimensions and Pin Configuration

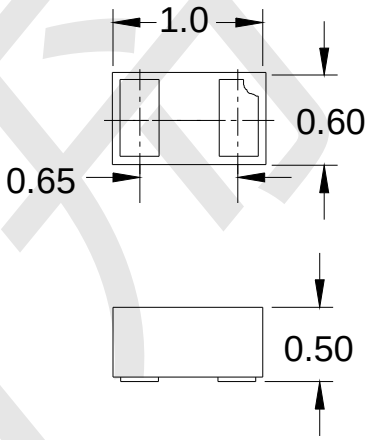

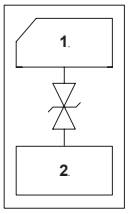

Absolute Maximum Ratings (Tamb=25°C unless otherwise specified)

Parameter	Symbol	Value	Unit
Peak Pulse Power (8/20μs)	Ppk	50	W
Peak Pulse Current (8/20μs)	Ipp	4	A
ESD per IEC 61000−4−2 (Air) ESD per IEC 61000−4−2 (Contact)	V_{ESD}	±25 ±20	kV
Operating Temperature Range	T_J	−55 to +125	°C
Storage Temperature Range	Tstg	−55 to +150	°C

Electrical Characteristics (TA=25°C unless otherwise specified)

Parameter	Symbol	Min	Typ	Max	Unit	Test Condition
Reverse Working Voltage	V_{RWM}			5	V	
Breakdown Voltage	V_{BR}	6			V	I_T = 1mA
Reverse Leakage Current	I_R			0.08	uA	V_{RWM} = 5V
Clamping Voltage	V_C			10	V	Ipp=1A(8x 20us pulse)
Clamping Voltage	V_C			14	V	Ipp=4A(8x 20us pulse)
Junction Capacitance	C_J		3		pF	VR = 0V, f = 1MHz

Typical Performance Characteristics (T_A=25°C unless otherwise Specified)

Fig1. 8/20μs Pulse Waveform

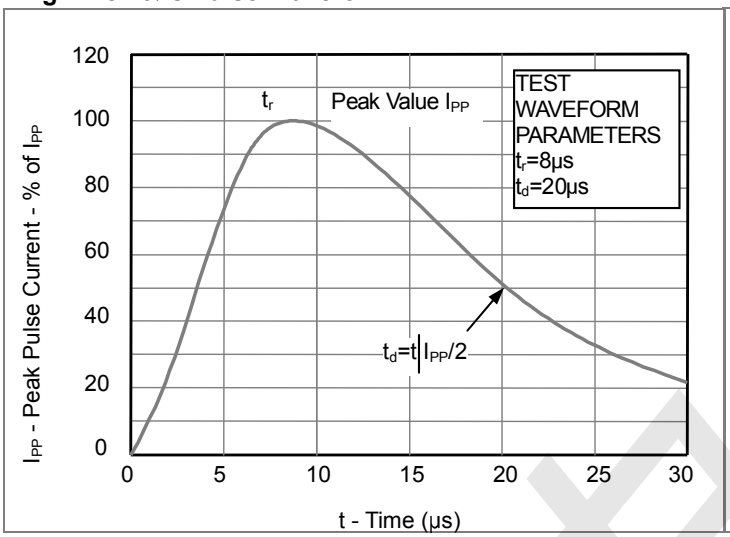

Fig2. ESD Pulse Waveform (according to IEC 61000-4-2)

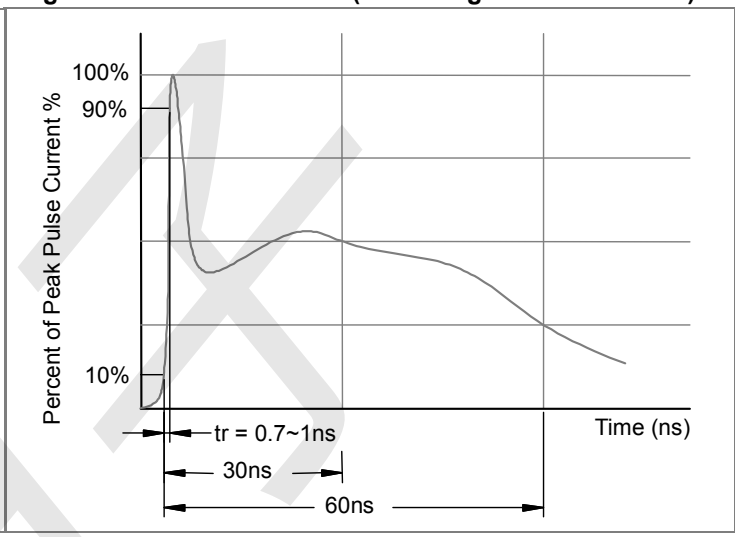

Fig3. Power Derating Curve

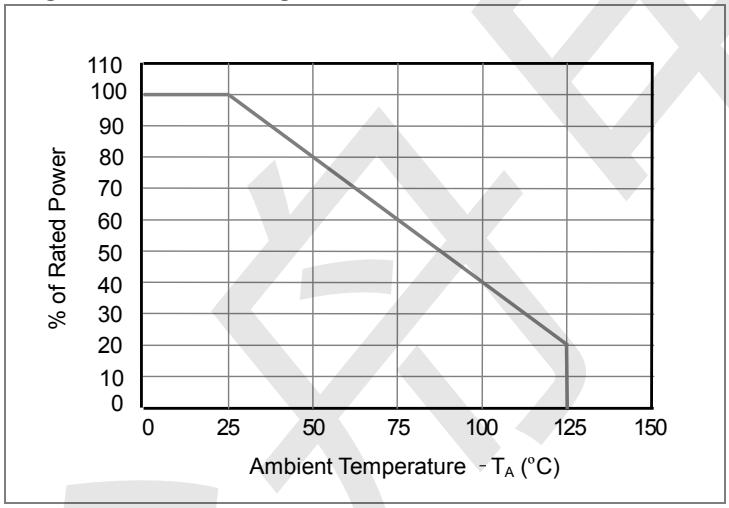

DFN1006-2 Package Outline Drawing (0402)

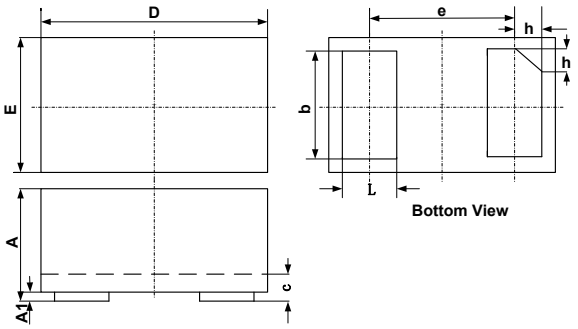

SYM	DIMENSIONS					
	MILLIMETERS			INCHES		
	MIN	NOM	MAX	MIN	NOM	MAX
A	0.45	0.50	0.55	0.018	0.020	0.022
A1	0.00	0.02	0.05	0.000	0.001	0.002
b	0.45	0.50	0.55	0.018	0.020	0.022
c	0.12	0.15	0.18	0.005	0.006	0.007
D	0.95	1.00	1.05	0.037	0.039	0.041
e	0.65 BSC			0.026 BSC		
E	0.55	0.60	0.65	0.022	0.024	0.026
L	0.20	0.25	0.30	0.008	0.010	0.012
h	0.07	0.12	0.17	0.003	0.005	0.007

Suggested Land Pattern

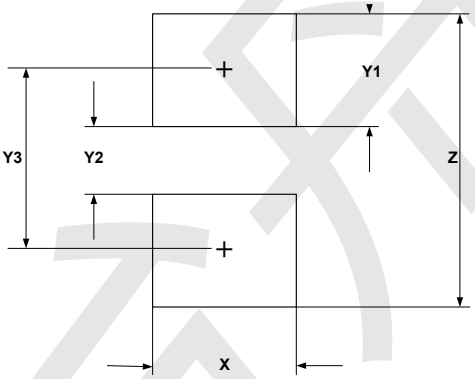

SYM	DIMENSIONS	
	MILLIMETERS	INCHES
X	0.60	0.024
Y1	0.50	0.020
Y2	0.30	0.012
Y3	0.80	0.032
Z	1.30	0.052