May.1.2026 Copyright 2026 HIROSE ELECTRIC CO., LTD. All Rights Reserved.
In case of consideration for using Automotive equipment / device which demand high reliability, kindly contact our sales window correspondents.

	COUNT	DESCRIPTION OF REVISIONS	BY	CHKD	DATE		COUNT	DESCRIPTION OF REVISIONS	BY	CHKD	DATE
△					. .	△					. .
△					. .	△					. .
△					. .	△					. .

RECOMMENDED PC BOARD LAYOUT

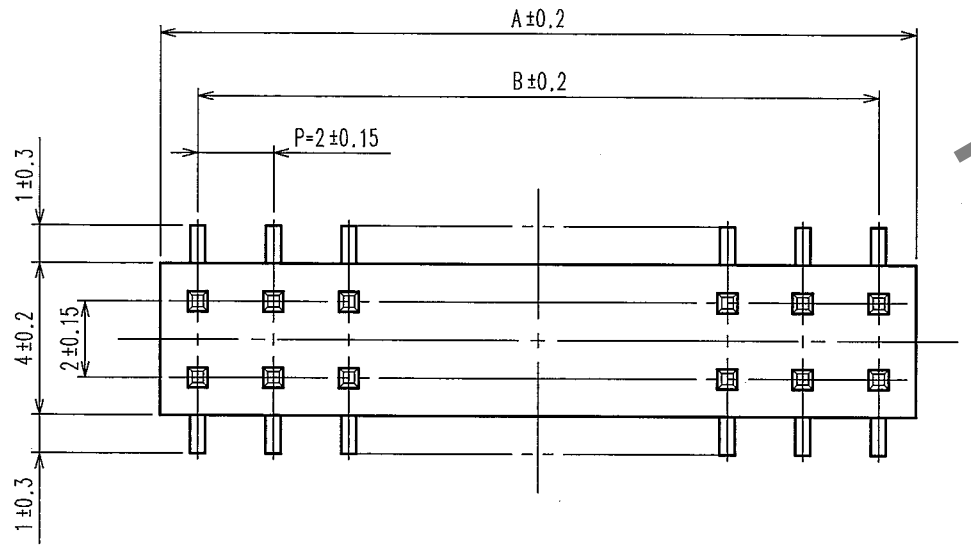

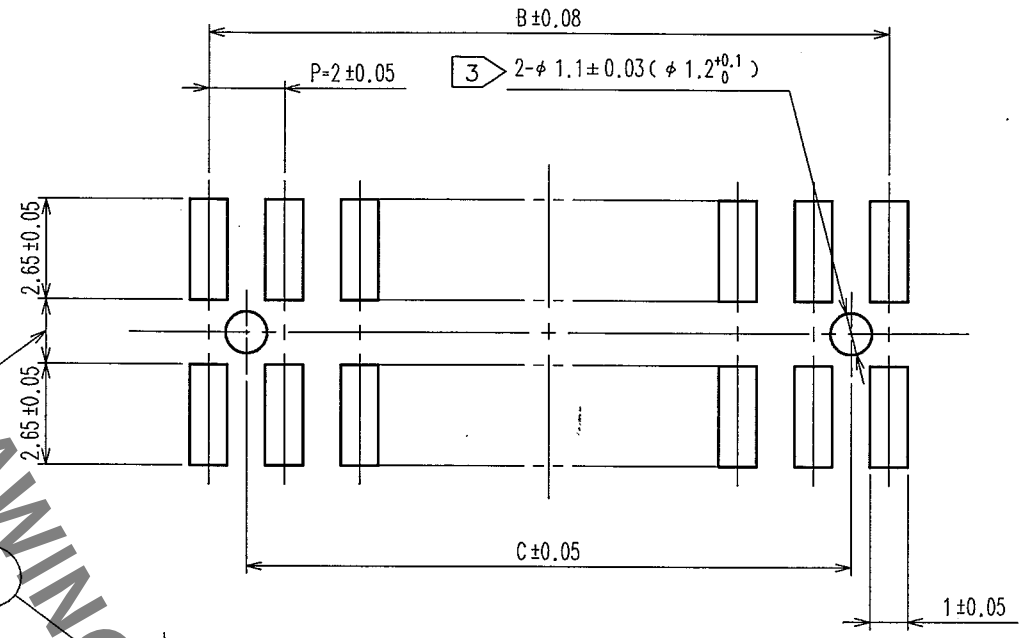

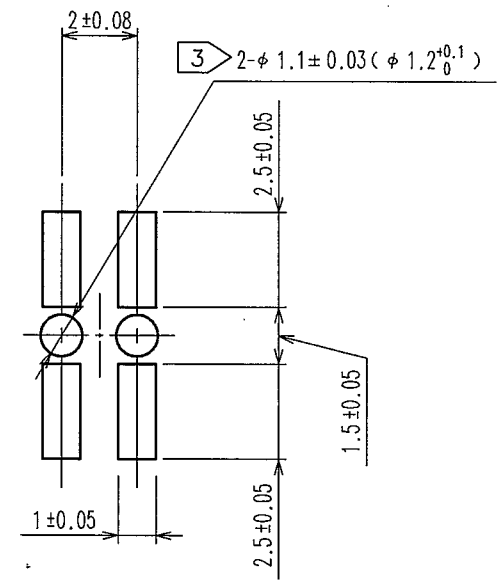

(IN CASE OF 4 CONTACTS)

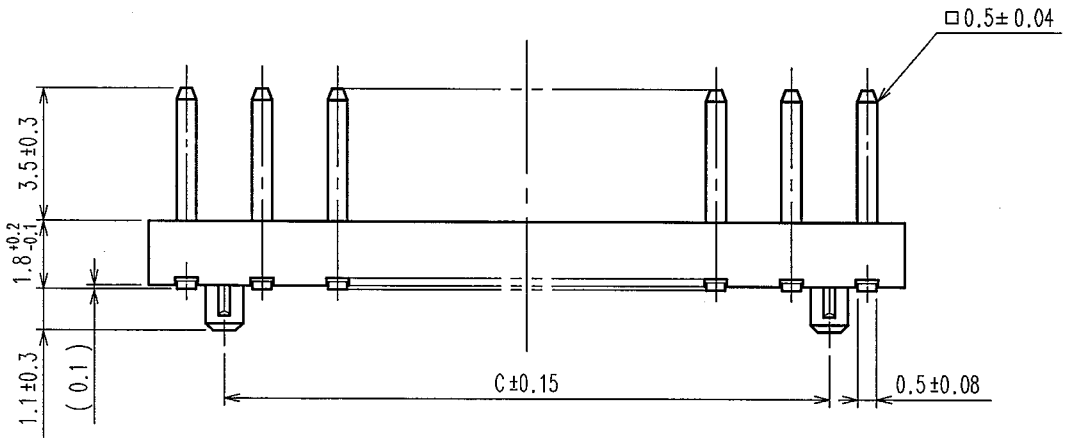

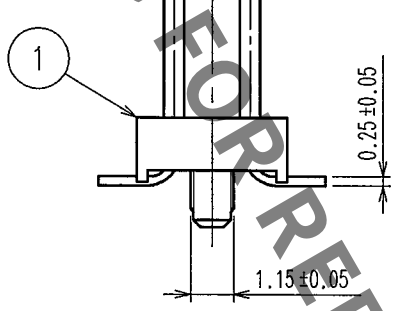

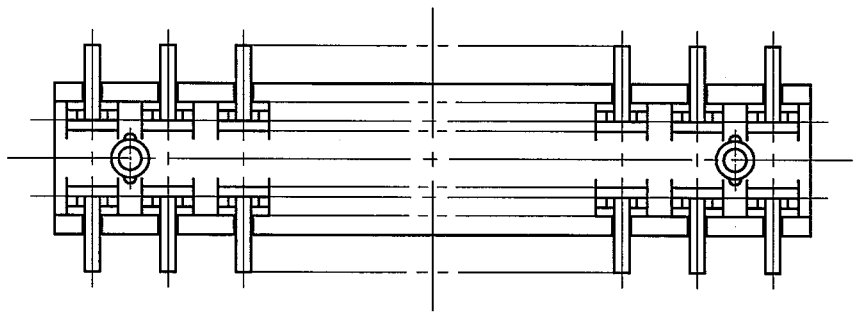

PART No.	CODE No.	4	A	B	C
A3A- 4PA-2SV(71)	CL621-1040-0-71	4	4	2	2
A3A- 6PA-2SV(71)	CL621-1041-3-71	6	6	4	2
A3A- 8PA-2SV(71)	CL621-1042-6-71	8	8	6	4
A3A-10PA-2SV(71)	CL621-1043-9-71	10	10	8	6
A3A-12PA-2SV(71)	CL621-1044-1-71	12	12	10	8
A3A-14PA-2SV(71)	CL621-1045-4-71	14	14	12	10
A3A-16PA-2SV(71)	CL621-1046-7-71	16	16	14	12
A3A-20PA-2SV(71)	CL621-1048-2-71	20	20	18	16
A3A-24PA-2SV(71)	CL621-1050-4-71	24	24	22	20
A3A-28PA-2SV(71)	CL621-1052-0-71	28	28	26	24
A3A-32PA-2SV(71)	CL621-1054-5-71	32	32	30	28
A3A-44PA-2SV(71)	CL621-1055-8-71	44	44	42	40
A3A-50PA-2SV(71)	CL621-1056-0-71	50	50	48	46

注 1 LEAD CO-PLANARITY SHALL BE 0.15 MAX.
2 THE DIMENSIONS IN PARENTHESES ARE FOR REFERNCE.
3 IN CASE OF THE AUTOMATED MOUNTING, RECOMMENDED HOLE DIAMETER OF BOSS SHALL BE $1.2^{+0.1}_{0}$.
4 NUMBER OF CONTACT.

NO.	MATERIAL	FINISH, REMARKS
1	POLYPHENYLENE SULFIDE	LIGHT BROWN / UL94 V-0
2	BRASS	CONTACT AREA:GOLD 0.2μm min. MOUNTING AREA:GOLD FLASH UNDER PLATING:NICKEL 2μm min.

CODE NO.(OLD)	DRAWN	DESIGNED	CHECKED	APPROVED	RELEASED
	T.NODA '05.03.30	K.Doi '05.03.30	K.Ogawa '05.03.30	H.Okawa '05.03.30	

SCALE	DRAWING NO.	PART NO.
FREE	EDC3-082601-21	A3A-*PA-2SV(71)
UNITS: mm	HRS HIROSE ELECTRIC CO., LTD	CODE NO. CL621 — 1/1

TO
PCK

HRS DRAWING FOR REFERENCE

FORM NO.229