Product Summary

- V_{DS} -20V
- I_D -2.8A
- $R_{DS(ON)}$(at V_{GS}=10V) ＜800mΩ
- 100% EAS Tested
- 100% ▽V_{DS} Tested



SOT-23

General Description

- Vertical Double-diffused MOSFET technology
- Excellent package for heat dissipation
- High density cell design for low $R_{DS(ON)}$
- Moisture Sensitivity Level 1
- Epoxy Meets UL 94 V-0 Flammability Rating
- Halogen Free

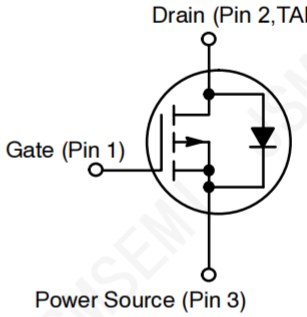

Applications

- Power switching application
- Uninterruptible power supply
- DC-DC convertor
- Motor drivers

Absolute maximum ratings(Ta=25°C)

参数/Parameter	符号/Symbol	数值/Value	单位/Unit
漏极-源极电压/Drain-SourceVoltage	V_{DS}	-20	V
栅极-源极电压/Gate-Source Voltage	V_{GS}	±8	V
漏极电流（持续）/Continuous Drain Current	I_D	-2.8	A
漏极电流（脉冲）/Pulsed Drain Current	I_{DM}	-10	A
耗散功率/Power Dissipation	P_D	0.35	W
热阻/ThermalResistanceJunctiontoAmbient	$R_{\theta JA}$	350	℃/mW
结温/JunctionTemperature	T_j	150	℃
储存温度/Storage Temperature	T_{stg}	-55～150	℃

Ordering Information

Order number	Package	Marking	Operation Temperature Range	MSL Grade	Ship, Quantity	Green
JSM2301S	SOT-23	A1SHB	-55 to150°C	1	T&R,3000	Rohs

Electrical characteristics(Ta=25°)

参数	符号	测试条件	最小值	典型值	最大值	单位
静态/Static Characteristics						
源极-漏极击穿电压	$V_{BR(DSS)}$	V_{GS}=0V,I_D=-250μA	-20			V
栅极开启电压	$V_{GS(th)}$	I_D=-250μA,V_{GS}=V_{DS}	0.4		-1	V
栅极漏电流	I_{GSS}	V_{GS}=±8V,V_{DS}=0V			±100	nA
零栅压漏极电流	I_{DSS}	V_{GS}=0V, V_{DS}=-20V			-1	μA
漏极源极导通电阻	$R_{DS(ON)}$	V_{GS}=-4.5V,I_D=-2.8A		0.090	0.112	Ω
		V_{GS}=-2.5V,I_D=-2A		0.110	0.142	
正向跨导	g_{fs}	V_{DS}=-5V,I_D=-2.8A		6.5		S
动态/Dynamic Characteristics						
输入电容	C_{iss}	V_{DS}=-10V,V_{GS}=0V, f=1MHz		405		pF
输出电容	C_{oss}			75		
反向传输电容	C_{rss}			55		
开关参数/Switching Characteristics						
总栅极充电电荷	Q_G	V_{DS}=-6V,V_{GS}=-4.5V, I_D=-2.8A		5.4	10	nC
栅极-源极充电电荷	Q_{GS}			0.8		nC
栅极-漏极充电电荷	Q_{GD}			1.1		nC
开启延时	$t_{D(on)}$	V_{DD}=-10V,I_D=-1A, V_{GEN}=-4.5V,R_G=1Ω, R_L=10Ω		11	20	ns
上升时间	t_R			35	60	ns
关闭延时	$t_{D(off)}$			30	50	
下降延时	T_f			10	20	
漏极-源极二极管参数/Drain-source Body Diode Characteristics						
源极-漏极二极管电流	I_S	Tc=25℃			-2.8	A
二极管正向脉冲电流	I_{SM}				-10	A
二极管正向压降	V_{SD}	I_S=-0.7A		-0.8	-1.2	V

注：① 脉冲测试脉冲宽度≤300μS,占空比≤2%;

PACKAGE OUTLINE

Plastic surface mounted package

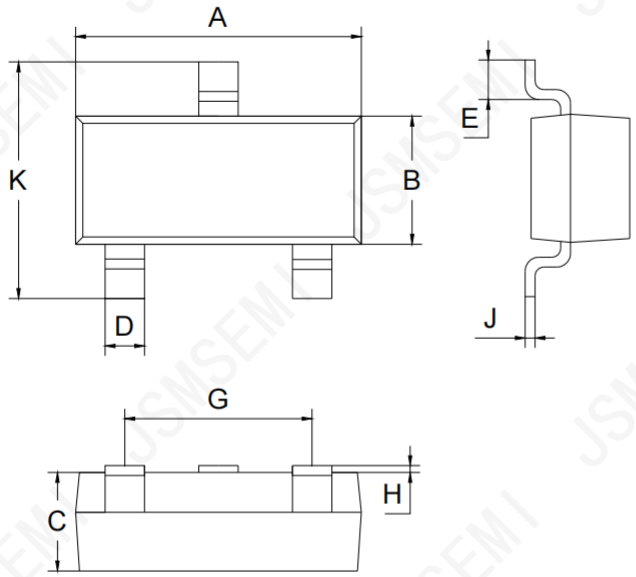

SOT-23		
Dim	Min	Max
A	2.70	3.10
B	1.10	1.50
C	0.9	1.1
D	0.3	0.5
E	0.35	0.48
G	1.80	2.00
H	0.02	0.1
J	0.05	0.15
K	2.20	2.60
All Dimensions in mm		

Soldering footprint

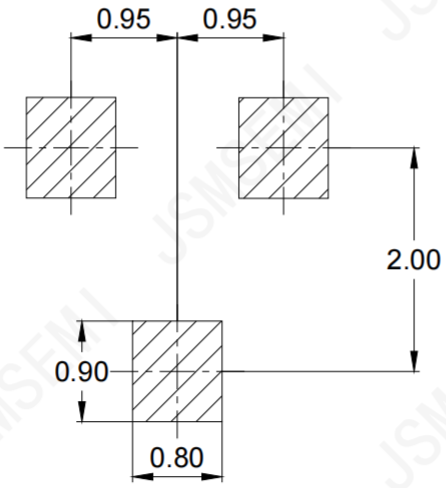

Unit : mm