SPECIFICATION FOR APPROVAL

承　　認　　書

CUSTOMER 客户名稱：	**NUMBER** 编号:　L023-1
DESCRIPTION 型　號：　**CR5040－561M**	**QUANTITY** 數量：　20PCS
PART NO. 品　名：　**SMD POWER INDUCTORS**	**DATE** 日期：　**2024-01-10**
CUSTOMER PART NO. 客戶料號：	**NOTE** 注解：

APPROVAL SIGNATURE 客戶承認簽章

Approved By 核　准	Checked By 审　查	Drawn By 制　作
李庆辉	刘志坚	劳水花

深圳市柯爱亚电子有限公司

Shenzhen Ceaiya Electronics Co., Ltd.

深圳地址: 深圳市龙华区高新技术开发区捷顺科技中心 B706

东莞地址：东莞市清溪镇力合紫荆智造中心 10 栋一单元

Http://www.szceaiya.com　　**Tel:** 0769-89135516　　**Fax:** 0769-89135519

CUSTOMER:	SPECIFICATIONS （Revisions）	TYPE **CR5040–561M**

History of change

Rev.	Effective Date	Changed Contents	Change reasons	Approved By
A0	2017-06-26	New release	/	

SPECIFICATIONS

TYPE:

CR5040－561M

1. Scope

This specification apply for CR5040 of power inductors

2. Appearance

2-1.Dimensions(mm)

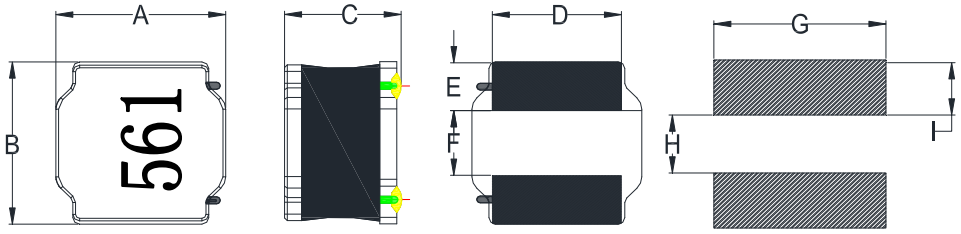

A	5.0 ± 0.3mm
B	5.0± 0.3mm
C	4.0mm MAX
D	4.0 ± 0.3mm
E	1.35± 0.3mm
F	2.3± 0.3mm
G	4.2mm
H	2.3mm
I	1.4mm

* Dimension without tolerance is approx.

3. Coils Specification

3-1. Connection (Bottom View)

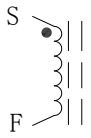

“S” is winding start

3-2. Turns and Wire

Terminal	S-F
Turns	130.75 Ts
Wire	0.10mm G1 P180

* Winding Turns are approx.

LEAD-FREE

RoHS Compliance

Note：	SPEC.NO.:
1. 线包涂胶。	L023-1
2. 印黑色字体。	2/6

3-3. Electronical characteristics

Item	Specifications	Measuring Conditions	Measuring Instrument
Inductance	560μH ± 20%　Within	100KHz/0.25V	CH1062
D.C.R	3.1Ω± 30%	At 25℃	CH502BC
Isat ※1	0.36A	100KHz/0.25V	CH1062&Chroma1320
Irise ※2	0.25A	At 25℃	6377&6220

※　1.This indicates the value of current when the inductance is 30% lower than its initial value at D.C superposition

※　2. D.C current when temperature rise ΔT=40℃ (Ta=20℃)

4. General Characteristics

4-1. Storage Temperature range : -40℃～ ＋105℃

4-2.Operating temperature range: －40℃ ～ ＋125℃ (Including coil's self temperature rise)

4-3.External appearance : No external defects can be found in the visual inspection.

4-4.Electrode strength : No electrode detachment should be found when the device is pushed in two directions of X and Y with the force of 10.0N for 10±2 seconds after soldering between copper plate and the electrodes. (Refer to figure at right)

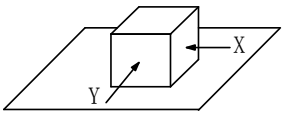

4-5.Vibration test : Inductance deviation is within ±10% after 1 hour sweeping vibration in each three directions, namely, forward and backward, up and down, right and left. The frequency is 10～55～10Hz and the amplitude of 1 minute cycle is 1.5mm PP.

4-6.Recommended reflow condition :

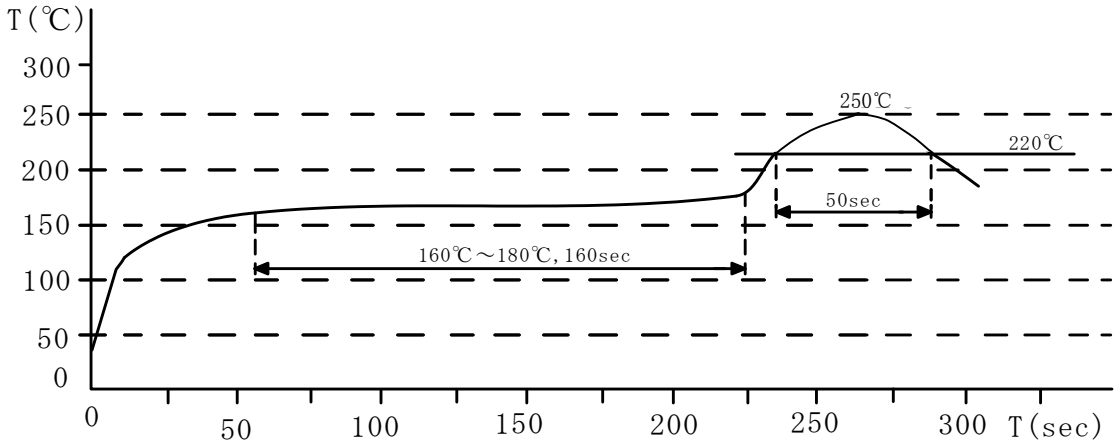

4-7.Humidity test : Inductance deviation is within ±5.0% after 96±4 hours test under the condition of relative humidity of 90～95% and temperature of 60±2℃, and 1 hour storage under room ambient conditions after the device is wiped with dry cloth.

5. Construction and materials

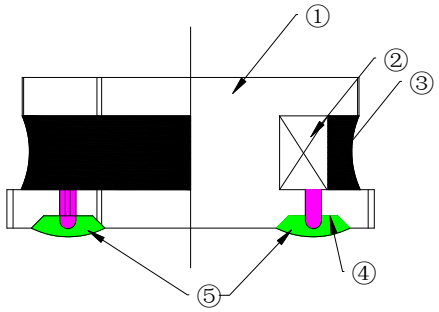

No.	Part name	Material	Ceaiya P/N
①	Drum Core	Ni-Zn Ferrite Core	TW/CY
②	Wire	Polyurethane enameled copper wire	3210200
③	Adhesive	Epoxy Resin Magnetic Powder	7001007
④	Plating Electrodes	Plating: Ag 3-7 μm Ni 1-3 μm Sn 3-7 μm	
⑤	Outer Electrodes	Top surface solder coating Sn99%、Ag0.3%、Cu0.7%	

6.Package Specification

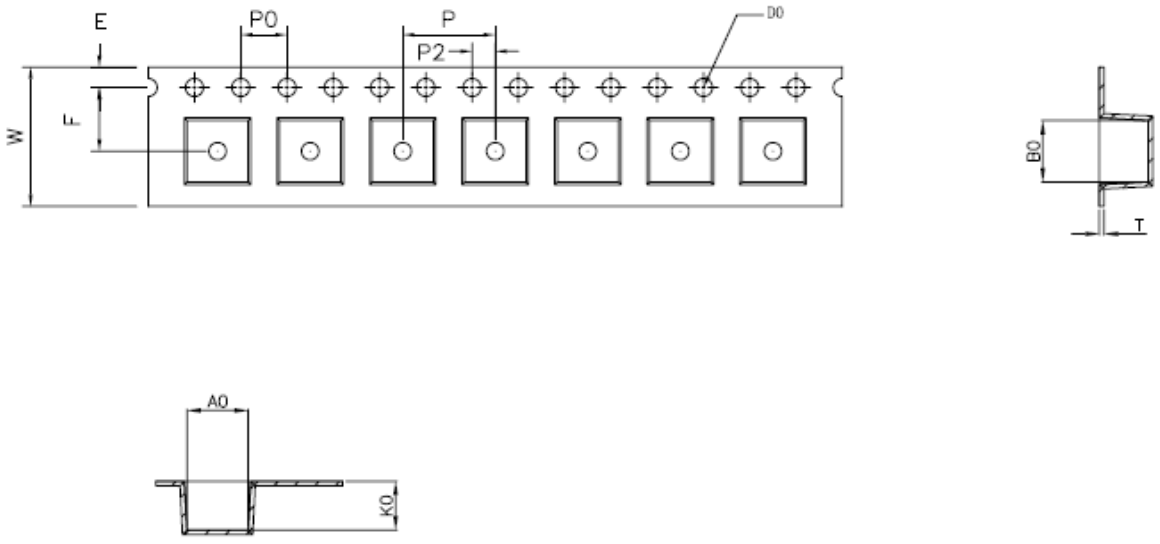

ITEM	W	A0	B0	K0	P	F	E	D0	D1	P0	P2	T
DIM	12.00	5.3	5.3	4.3	8.00	5.50	1.75	1.50	1.50	4.00	2.00	0.4
TOLE	±0.3	±0.1	±0.1	±0.15	±0.1	±0.15	±0.1	+0.1	+0.1	±0.1	±0.1	±0.05

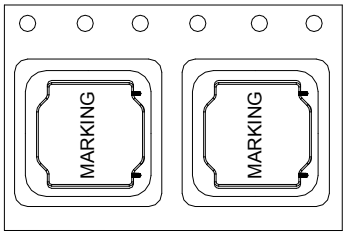

7. CARRIER REEL DIMENSIONS：

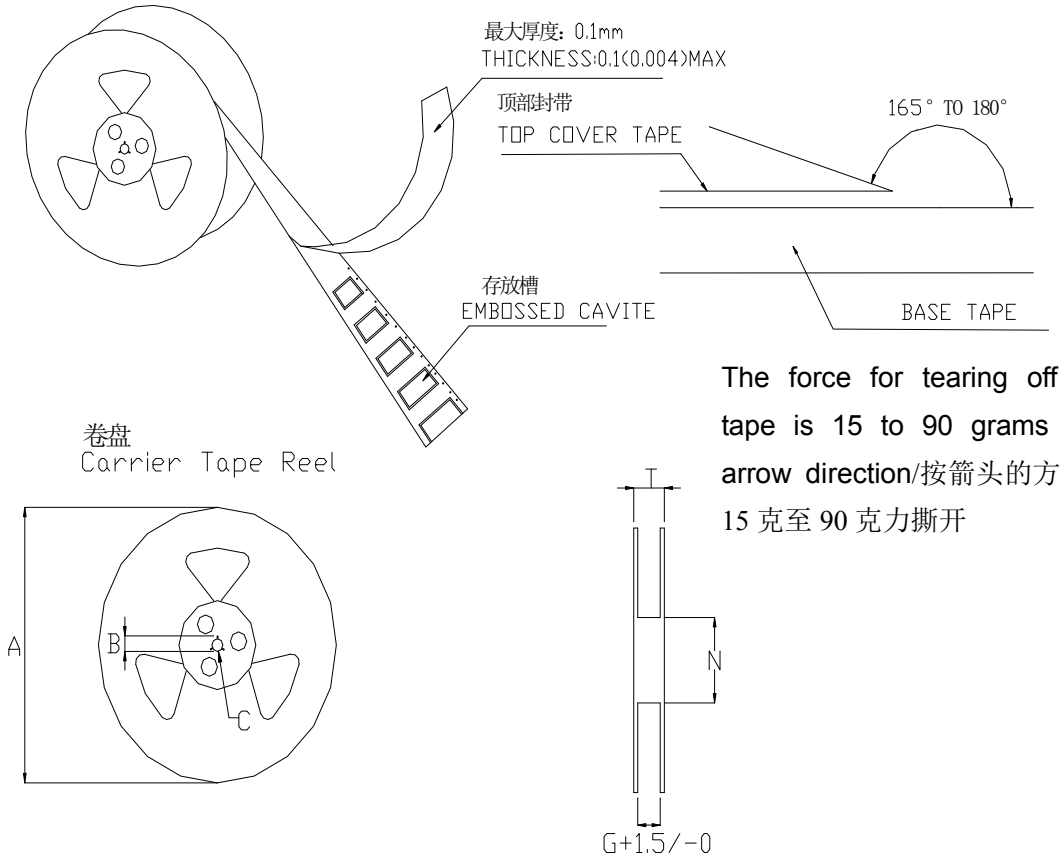

The force for tearing off cover tape is 15 to 90 grams in the arrow direction/按箭头的方向施加 15 克至 90 克力撕开

Unit: mm

Type	A	B	C	G	N	T
12mm	330	21±0.8	13±0.4	12.4	100	16.4

8. PACKAGE SPECIFICATION：

1.5KPCS/Reel　4.5KPCS/Inner Box　13.5KPCS/Outer Box