FKFSR

(Former FSRLF)

8.7mm x 3.8mm

SMD Tuning Fork Crystal

STANDARD SPECIFICATIONS	
PARAMETERS	**MAX (Unless otherwise noted)**
Frequency Range	32.768 kHz
Frequency Tolerance @ 25°C	(See options below)
Frequency Stability, ref 25°C (Temperature Coefficient)	-0.04 PPM / $(\Delta°C)^2$
Temperature Range Turnover (T_O) Operating (T_{OPR}) Storage (T_{STG})	 +20°C ~ +30°C -40°C ~ +85°C -55°C ~ +125°C
Equivalent Series Resistance (R_S)	50 kΩ
Load Capacitance (C_L)	(See options below)
Insulation Resistance @ 100V_{DC}	500MΩ Min
Drive Level	1.0µW
Aging per year (@ 25°C)	±3 PPM
Maximum Soldering Temp / Time	260°C / 10 Seconds
Moisture Sensitivity Level (MSL) per J-STD-033	1
Termination Finish	Matte Sn
Lead (Pb) Free	Exemption 7a
RoHS Compliant	Yes
REACH Compliance	Notification of Lead (Pb) >0.1%(w/w)

Temperature Coefficient

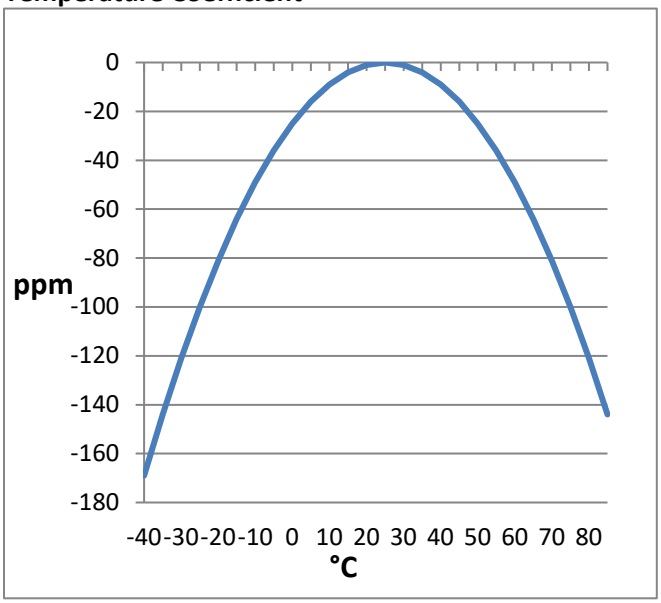

DIMENSIONS / MECHANICAL SPECIFICATIONS

Dimensions (mm)

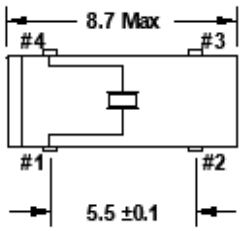

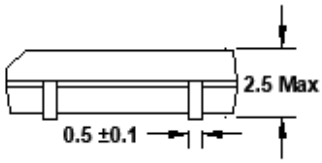

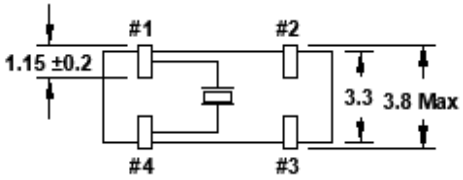

Recommended Solder Pad Layout

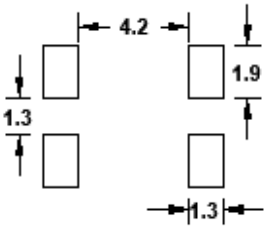

RoHS EXEMPTION 7a: *High Temperature solder (>85% Pb) in crystal seal*

Note: Dimensional drawing is for reference to critical specifications defined by size measurements. Certain non-critical visual attributes, such as side castellations, etc. may vary.

FKFSR

(Former FSRLF)

8.7mm x 3.8mm

SMD Tuning Fork Crystal

TAPE SPECIFICATIONS (mm)							REEL SPECIFICATIONS (mm)						
A	B	C	D	E	F	REEL QTY	G	H	I	J	K	L	M
Ø1.55	4.0	8.0	7.5	16.0	2.7	-T3 = 3,000	2.0	Ø13	Ø21	Ø50	Ø330	16.4	2.0

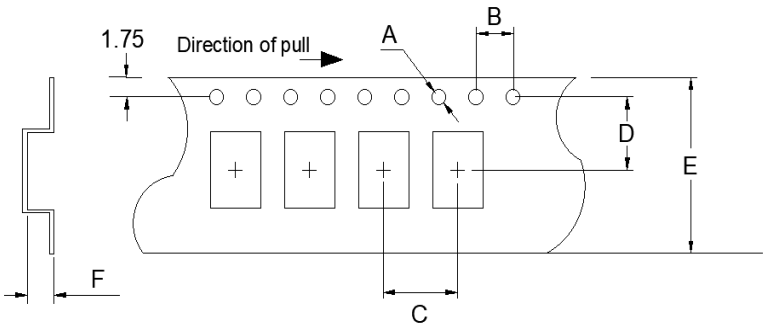

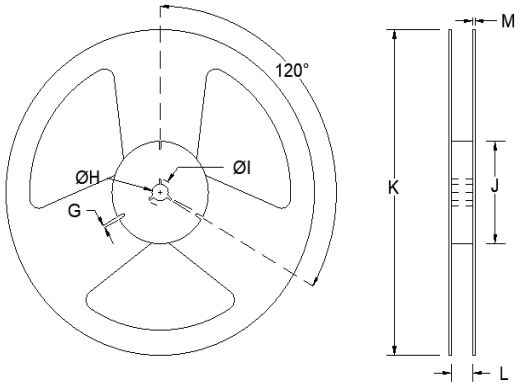

Available Options & Part Identification for SMD Tuning Fork Crystal KFSR

Sample PN: FKFSREIHM0.032768-T3

F	KFSR	E	I	H	M	0.032768	-T3
Fox	**Model Number**	**Tolerance** **E = ±20ppm**	**Stability** **I = -0.04 PPM/ (Δ°C)²**	**Load Capacitance** B = 6pF **H = 12.5pF**	**Operating Temperature** **M = -40 ~ +85°C**	**Frequency (MHz)**	**Values Added Options** Blank = Bulk T3 = 3,000 pcs

Reliability Test Conditions
Please contact Abracon Quality Assurance department