洲光源
CHAULIGHT

# 产品规格书
# SPECIFICATION

客户名称：_____

Customer Name

产品类型：1206 红光

Product Name

产品型号：ZSR1-3212C-09-Z3

Part No.

| | | | | |
|---|---|---|---|---|
| ☐技术参考 Technical Reference ☐样品 Sample ☐量产供货 Mass Product | | | | |
| 客户审核（加盖公章）<br>Client approval（Stamp） | | 洲光源审核<br>Chaulight approval | | |
| 核准 Approval | 确认 Checked | 核准 Approval | 确认 Checked | 制作 Edited |
| | | 郝三强 | 王乐 | 吉召召 |
| ☐ 接收 Qualified ☐ 不接收 Disqualified 日期 Date：2022.11.26 | | | | |

地址(Add)：深圳市宝安区航城街道航空路 36 号华盛泰科技大厦 D 栋 502
No.502,BuildingD,HuashengtaiScienceandTechnologyBuilding,No.36,HangchengStreet,Bao'anDistrict,Shenzhen.

本规格书仅用于双方交流用需经双方签订后方可生效，自签订后有效期为两年，期满后需以书面形式续签。最终解释权为洲光源所有。

This product specification is only used for technical communication.Only after the signature or seal, the specifications have the force of law.since the signing of the validity period of two years, after the expiration of the written renewal. The final interpretation right is owned by the CHAULIGHT.

广东洲光源红外半导体有限公司
Guangdong Chaulight Infrared Semiconductor Co.,Ltd.

# ZSR1-3212C-09-Z3

贴片式发光二极管
SMD Emitter

ZSR1-3212C-09-Z3 此材料比直插式组件小，从而板的尺寸更小，堆积密度更高，占用空间减少，最终获得更小的设备。

The ZSR1-3212C-09-Z3 Taping is much smaller than lead frame type components, thus enable smaller board size, higher packing density, reduced storage space and finally smaller equipment to be obtained.

## 特性 Feature

--适用于自动贴片机、适用于红外线回流焊制程

Suitable for automatic mounter、Suitable for infrared reflow soldering process

--发射波长 618-630nm

Dominant wavelength λd=618-630nm

--无铅材料、RoHS 认证

Pb.Free、RoHS compliant version

## 应用 Application

--光学指示、室内显示、LCD 背光、开关和标志，显示器等

Optical indicator、 Indoor display、Backlight for LCD、switch and Symbol、display

## 最大额定值 Absolute Maximum Ratings

| 测试项目 Parameter（Ta=25℃）*1 | 符合 Symbol | 范围 Ratings | 单位 Unit |
|---|---|---|---|
| 功耗 Power Dissipation | Pd | 48 | mW |
| 反向电压 Reverse Voltage | $V_R$ | 5 | V |
| 持续正向电流 Forward Current | $I_F$ | 30 | mA |
| 脉冲电流 Maximum Surge Current *2 | $I_{FP}$ | 100 | mA |
| 工作温度 Operating Temperature | Topr | -30~+85 | ℃ |
| 储存温度 Storage Temperature | Tstg | -40~+90 | ℃ |
| 抗静电能力 Electrostatic Discharge | ESD | 2000(HBM) | V |
| 焊接温度 Lead Soldering Temperature*3 | Tsol | 回流焊：255℃,10s<br>手动焊：300℃,3s | ℃ |

*1、 在 25 摄氏度的环境中测试 below 25 Free Air Temperature.

*2、脉宽少于等于 100us，占空比 1% Pulse width≦100μs,Duty cycle= 1%.

*3、离胶体 2mm 以上焊接 5s 内 2mm form body for 5 seconds.

CHAULIGHT

## 产品尺寸 Package Dimension

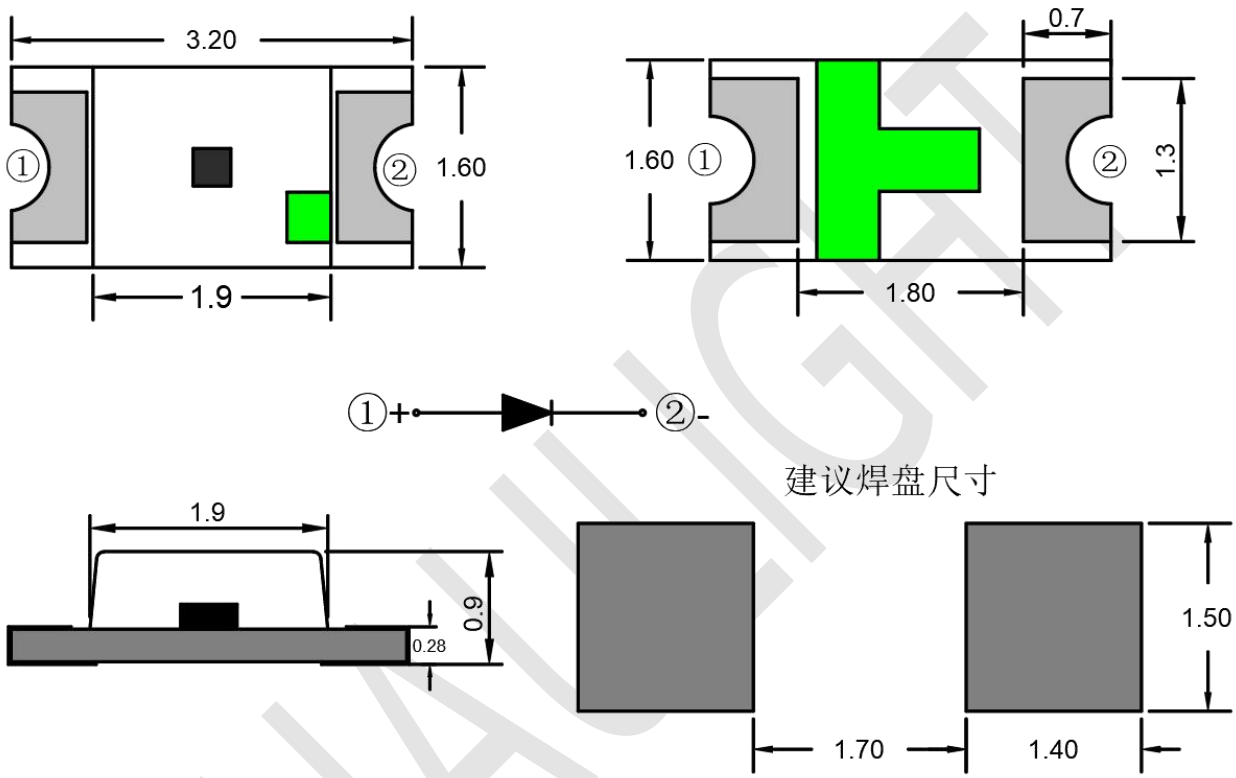


备注 Notes:
一所有尺寸为毫米标识
All dimensions are in millimeters
一未标识尺寸正负公差为 0.1mm
Tolerances unless dimensions ±0.1mm

CHAULIGHT

## 光电特性 Electro-Optical Characteristics

| 电性参数（温度=25℃）<br>Parameter（Ta=25℃） | 符号<br>Symbol | 条件<br>Condition | 最小值<br>Min. | 典型值<br>Typ. | 最大值<br>Max. | 单位<br>Units |
|---|---|---|---|---|---|---|
| 光强度 Light Intensity | Iv | $I_F$=20mA | 75 | --- | 220 | mcd |
| 主波长 Dominant Wavelength | λd | $I_F$=20mA | 618 | --- | 630 | nm |
| 正向电压 Forward Voltage | $V_F$ | $I_F$=20mA | 1.8 | --- | 2.4 | V |
| 反向电流 Reverse Current | $I_R$ | $V_R$=5V | --- | --- | 5 | μA |
| 发光角度 View Angle | 2θ1/2 | $I_F$=20mA | --- | 120 | --- | deg |

CHAULIGHT

## 典型光电特性曲线图 Typical Electro-Optical Characteristics Curve

Relative intensity VS wavelength

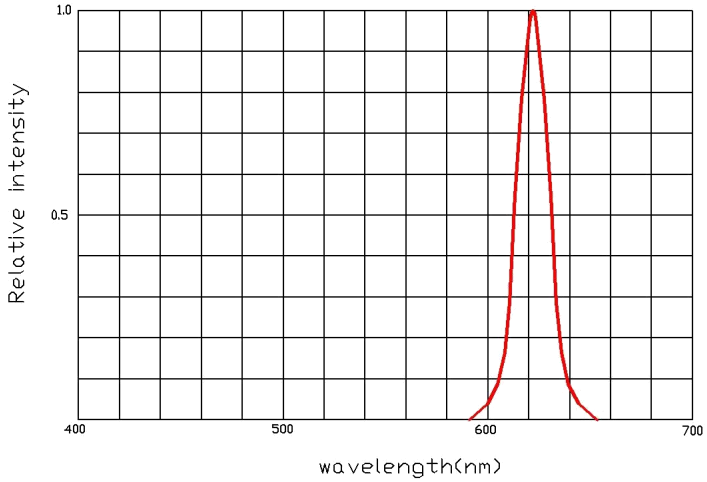


Voltage current relationship

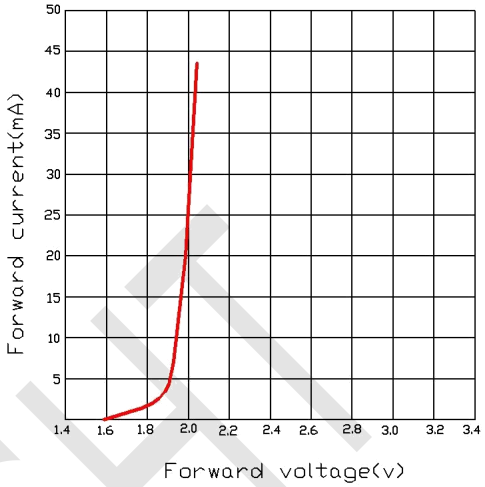


Current and a'mbient temperature

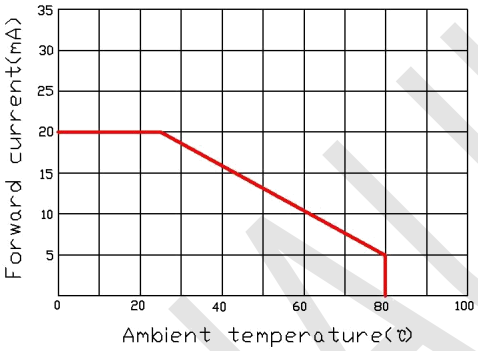


Relative light intensity vs current

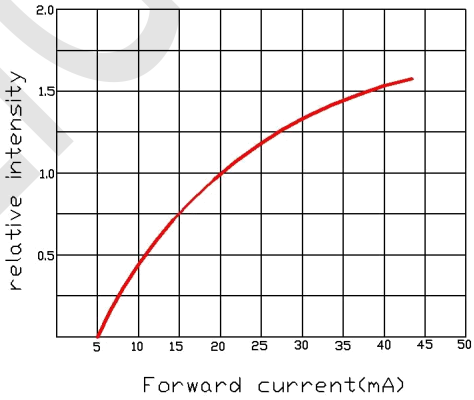


Relative light intensity vs ambient temperature

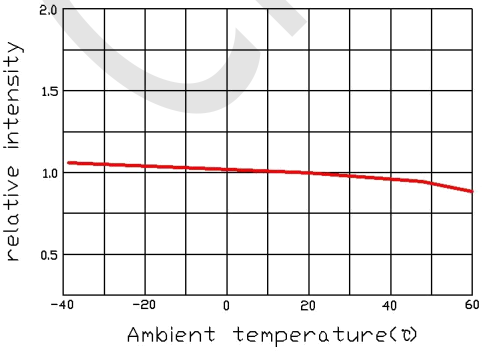


Radiation angle

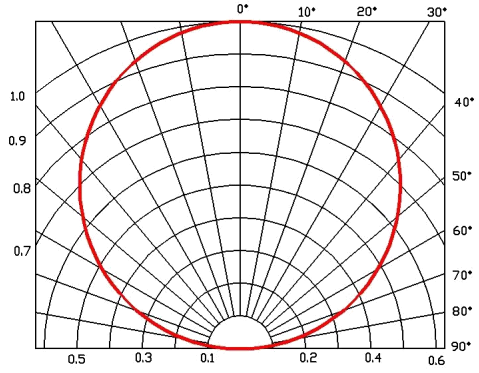


CHAULIGHT

## 包装规格 Packing Specification

--卷轴包装尺寸 Package Dimensions

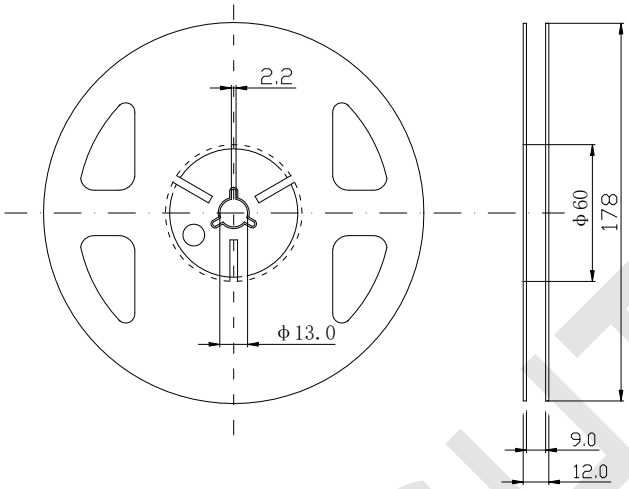


--载带编带的尺寸 Carrier Tape Dimensions

进料方向 Progressive Direction

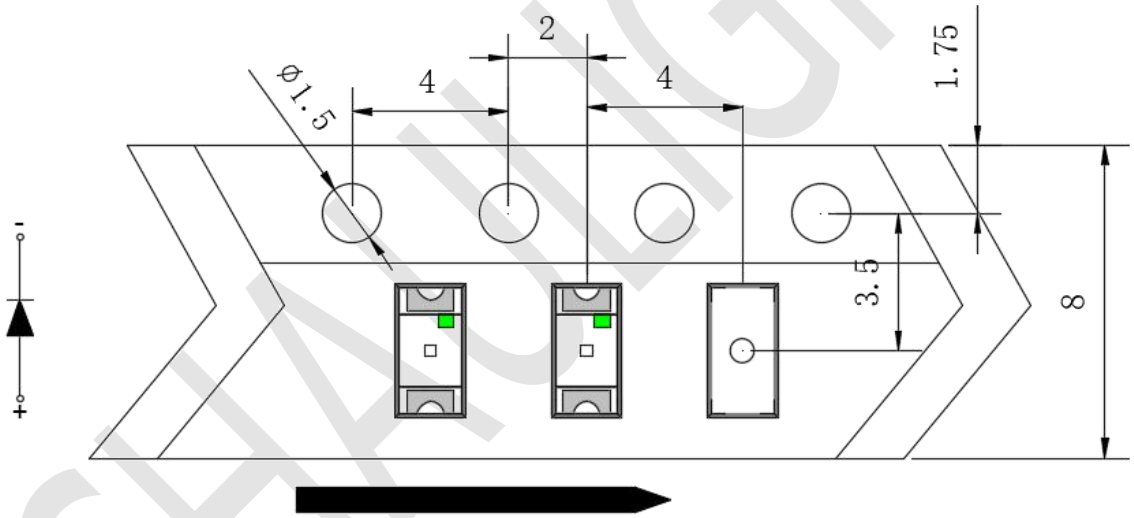


--装载数量 Loaded Quantity

3000 个/盘 3000pcs/reel

--备注 Note

所有的尺寸公差最少是正负 0.1 毫米 The tolerances unless mentioned is ±0.1mm.

CHAULIGHT

# 注意事项 Note

**--过流保护 Over-current-proof**

1、客户必须应用电阻进行保护，否则会造成轻微电压偏移大电流变化（烧毁将发生）。Customer must apply resistors for protection, otherwise slight voltage shift will cause big current change (Burn out will happen).

**--储存 Storage**

1、产品准备使用前不要打开防潮袋。Do not open moisture proof bag before the products are ready to use.

2、在打开包装之前，二极管应保持在 10℃~30℃和 90%RH 或以下。Before opening the package, the LED should be kept at 10℃~30℃ and 90%RH or less.

3、二极管建议在一年内使用。The LED suggested be used within one year.

4、 打开包装后，设备必须存储在 10°C~30°C 和 60%RH，并在 168 小时内使用（地板寿命）。如果未使用的二极管仍然存在，它应储存在防潮包装中。After opening the package, the devices must be stored at 10°C~30°C and 60%RH, and used within 168 hours (floor life). If unused LED remain, it should be stored in moisture proof packages.

5、如果吸湿材料（干燥剂材料）已褪色或未打开的袋子已超过保质期或设备（袋外）已超过地板寿命，需要烘焙处理。If the moisture absorbent material (desiccant material) has faded or unopened bag has exceeded the shelf life or devices (out of bag) have exceeded the floor life, baking treatment is required.

6 、如果需要烘焙，请参阅 IPC/JEDECJ-STD-033 进行烘焙程序或建议以下条件：在 60° C±5° C 和 5%RH<96 小时（筛/管/套单位）If baking is required, refer to IPC/JEDEC J-STD-033 for bake procedure or recommend the following conditions: 96 hours at 60°C ± 5°C and < 5 % RH (reeled/tubed/loose units)

**--焊接条件 Soldering Condition**

1、回流焊温度曲线推荐（无铅）： Recommended for return welding temperature curve (lead-free)

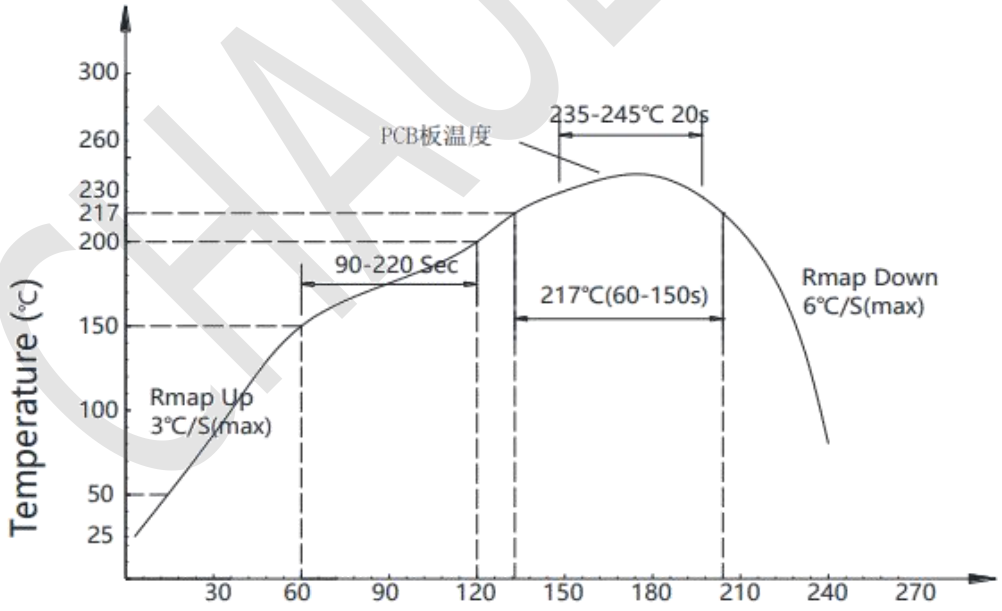


2、回流焊不应做两次以上。Reflow soldering should not be done more than two times.

3、焊接时，不要在加热过程中对 LED 施加压力。 When soldering, do not put stress on the LEDs during heating.

4、焊接后，不要使电路板翘曲。After soldering, do not warp the circuit board.

**--烙铁条件 Soldering Iron**

每个端子都要去烙铁尖端温度低于 350℃为 3 秒内一次少于烙铁容量 25W。 离开两秒钟然后更多的间隔，并做焊接每个终端。手工焊料通常在开始的时候容易损坏产品。Each terminal is to go to the tip of soldering iron temperature less than 350℃ for 3 seconds within once in less than the soldering iron capacity 25W. Leave two seconds and more intervals, and do soldering of each terminal. Be careful because the damage of the product is often started at the time of the hand solder.

**--手工补数 Repairing**

修理不应在 LED 焊接后进行。 当修理是不可避免的是，应该使用双头烙铁（如下图所示）。 应该是事先确认 LED 的特性是否会或不会损坏通过修理。Repair should not be done after the LEDs have been soldered. When repairing is unavoidable, a double-head soldering iron should be used (as below figure). It should be confirmed beforehand whether the characteristics of the LEDs will or will not be damaged by repairing.

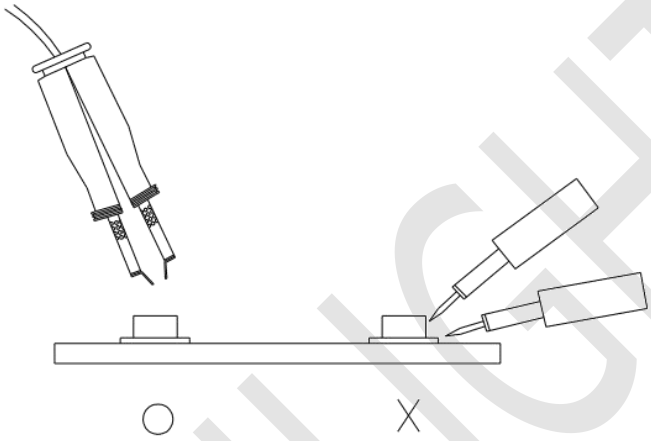

**--其他 Other**

1、以上规格可更改，恕不另行通知。 洲光源将为上述规格的材料变更保留权力 Above specification may be changed without notice. CHAU LIGHT will reserve authority on material change for above specification.

2、当使用此产品时，请观察这些规格表中概述的绝对最大额定值和使用说明。洲光源不承担任何损坏结果的责任从不符合绝对最大额定值的产品的使用和这些规格表中包含的说明 When using this product, please observe the absolute maximum ratings and the instruction for using outlined in these specification sheets. CHAU LIGHT assumes no responsibility for any damage resulting from use of the product which does not comply with the absolute maximum ratings and the instructions included in these specification sheets.

3、此规格书版权属广东洲光源红外半导体有限公司。未经允许不得转载或复印。These specification sheets include materials protected under copyright of CHAU LIGHT corporation.Please don’t reproduce or cause anyone to reproduce them without CHAU LIGHT ’s consent.

## 更改记录表 Engineering Change Notice-Record

| 版本 Edition | 更改日期 Date | 主要更改内容 Main Content | 拟 制 Prepared | 确 认 Checked |
|---|---|---|---|---|
| 1.1 | 2022.11.26 | 新版本发布 New Edition | 王乐 | 郝三强 |
| | | | | |
| | | | | |