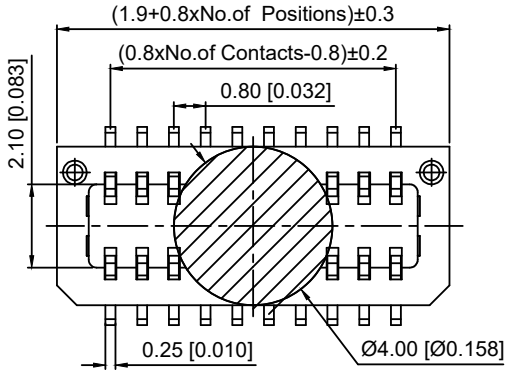

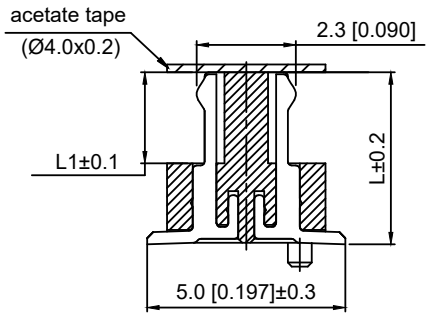

Specifications:
规格：
Voltage rating:50V AC/DC
额定电压：50V AC/DC
Current rating:0.5A AC/DC
额定电流：0.5A AC/DC
Withstanding voltage:200V AC/minute
耐受电压：200V AC/分钟
Temperature range:-40℃-+105℃
温度范围：-40℃-+105℃
Insulation resistance:500MΩ min
绝缘电阻：500MΩ Min
Contact resistance:20mΩ Max
接触电阻：20mΩ Max

X0814 W V S - 2x06FS S - 9T V01
① ② ③ ④ ⑤ ⑥ ⑦ ⑧ ⑨

1.Series No
2.Category:W-Wafer
3.Welding Borad Rangle:V-Stright 180°
4.Welding Way:S-SMT
5.Row No.Pin No:XX-02~50P
6.Height:A=4.0mm; B=4.5mm; C=5.0; D=5.5
E=6.0;F=6.5;;G=7.0;
7.Special No:S-With positioning columm
Blank-No positioning columm
8.Material:9T-Nylon 9T UL 94V-0
9.Plating:V01-Gold Flash ; SN-Tin Plated

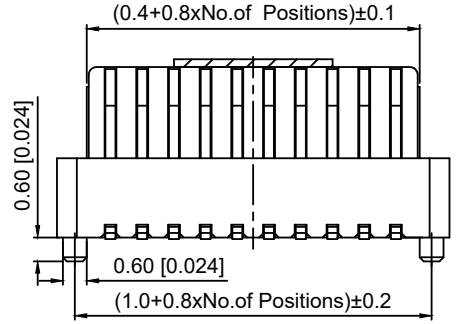

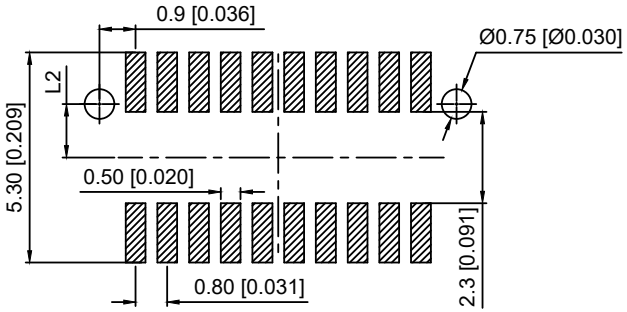

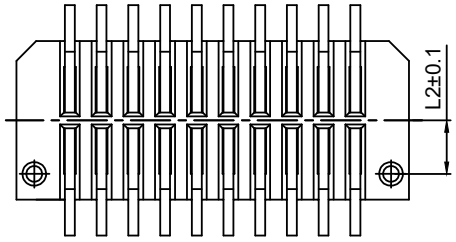

Recommended P.C.B Layout

Mating Height	PLUG	L	L1	L2
A=4.0	2.80	2.80	1.80	1.35
B=4.5	3.30	3.30		
C=5.0	3.80	3.80		
D=5.5	4.30	4.30	2.30	
E=6.0	4.80	4.80		
F=6.5	5.30	5.30		
G=7.0	5.30	5.30		1.25

X0814WVS-2x06FS-9TV01	Nylon 9T	Phosphor Bronze	X0814F
PART N0	Material	Material(Pin)	Suitable XKB Famale

					ANGLAR	±5°
ΔX					L≤ 4	±0.2
ΔX					4<L≤ 16	±0.3
ΔX					16<L≤ 63	±0.4
MARK	DESCRIPTION	DATE	REVISED	APPROVED	L> 63	±0.5
REVISIONS					UNSPECIFIED TOLERANCES	

DSND		SCALE: N/A	MODEL TYPE: 0.8mm BTB Connector
DWN		VIEW:	PART NO.: X0814WVS-2x06FS-9TV01
CHKD		UNIT: mm/in	DWG NO.: X-X0814WVS-2x06FS-9TV01
APPD		SIZE: A4	WEIGHT / SHEET / REVISION

XKB INDUSTRIAL PRECISION CO.,LIMITED

WEIGHT	SHEET	REVISION
	1/1	A0