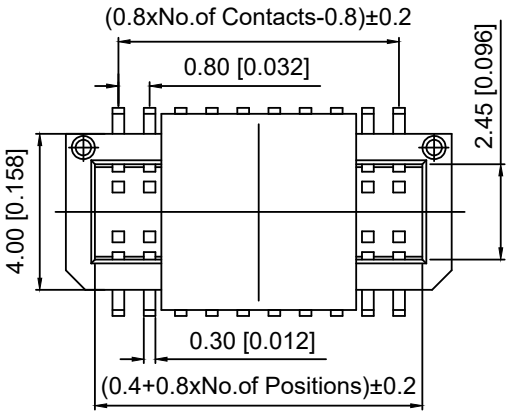

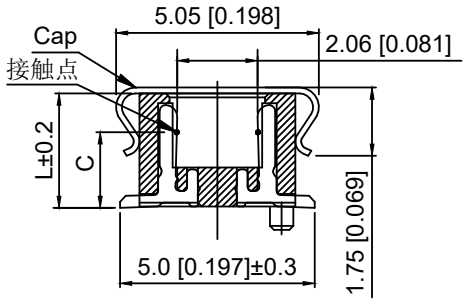

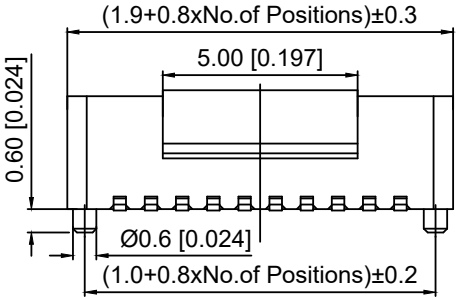

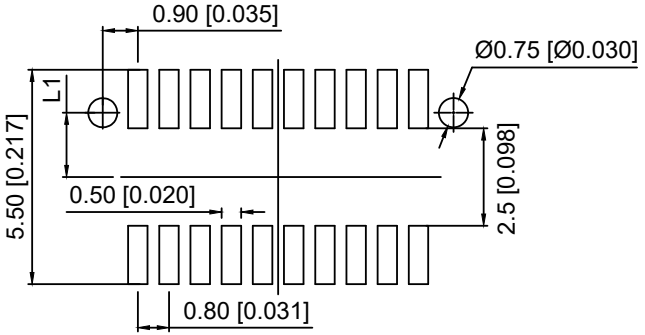

Recommended P.C.B Board Layout

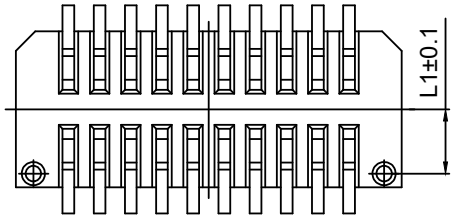

Specifications:
规格：
Voltage rating:50V AC/DC
额定电压：50V AC/DC
Current rating:0.5A AC/DC
额定电流：0.5A AC/DC
Withstanding voltage:300V AC/minute
耐受电压：300V AC/分钟
Temperature range:-40℃-+105℃
温度范围：-40℃-+105℃
Insulation resistance:1000MΩ min
绝缘电阻：1000MΩ Min
Contact resistance:20mΩ Max
接触电阻：20mΩ Max

X0814 F V S - 2x08CS - 9TV01
① ② ③ ④ ⑤ ⑥ ⑦ ⑧ ⑨

1.Series No
2.Category:F-Female
3.Welding Borad Rangle:V-Stright 180°
4.Welding Way:S-SMT
5.Row No.Pin No:XX-02~50P
6.Height:A=2.9mm; B=3.4mm; C=3.9; C1=3.9
7.Special No:S-With positioning columm
Blank-No positioning columm
8.Material:9T-Nylon 9T UL 94V-0
9.Plating:V01-Gold Flash ; SN-Tin Plated

Mating Height	PLUG	SOCKET	L	L1	C(Ref)
A=4.0	2.80	A=2.90	2.90	1.65	1.94
B=4.5	3.30				
C=5.0	3.80				
D=5.5	4.30	B=3.40	3.40	1.65	1.94
E=6.0	4.80				
F=6.5	5.30				
G=7.0	5.30	C=3.90	3.90	1.65	2.44
		C1=3.9	3.90	1.25	2.44

PART N0	Material	Material(Pin)	Suitable XKB Wafer
X0814FVS-2x08CS-9TV01	Nylon 9T	Phosphor Bronze	X0814W

MARK	DESCRIPTION	DATE	REVISED	APPROVED
ΔX				
ΔX				
ΔX				

REVISIONS

UNSPECIFIED TOLERANCES	
ANGLAR	±5°
L≤ 4	±0.2
4<L≤ 16	±0.3
16<L≤ 63	±0.4
L> 63	±0.5

DSND		SCALE: N/A	MODEL TYPE: 0.8mm BTB Connector
DWN		VIEW:	PART NO.: X0814FVS-2x08CS-9TV01
CHKD		UNIT: mm/in	DWG NO.: X-X0814FVS-2x08CS-9TV01
APPD		SIZE: A4	

XKB INDUSTRIAL PRECISION CO.,LIMITED

WEIGHT	SHEET	REVISION
	1/1	A0