BORN SEMICONDUCTOR

BDFN1610A052U

ESD Protection Diode Array

Features

- Solid-state silicon-avalanche technology
- Low clamping Voltage
- Up to two I/O Lines of Protection
- Ultra low capacitance: 0.45pF typical (I/O to GND)
- Low Leakage
- Low operating voltage:5V
- Flow-Through design
- IEC 61000-4-2 ±20kV contact ; ±25kV air
- IEC 61000-4-4 (EFT) 40A (5/50ns)
- IEC 61000-4-5 (Lightning) 5A (8/20μs)

Package

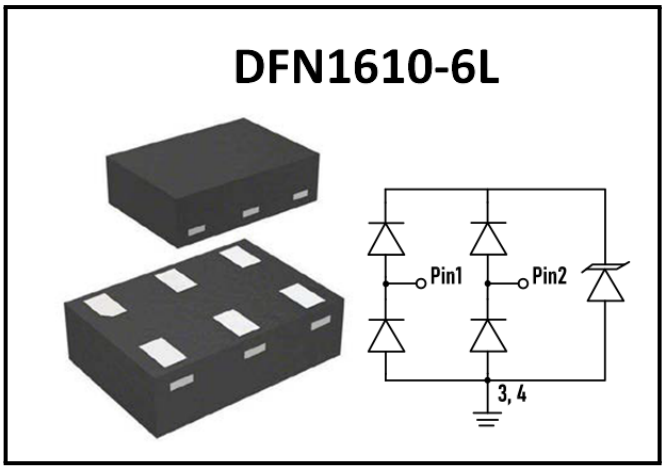

Applications

- Digital Visual Interface(DVI)
- MDDI Ports
- Display Port TM Interface
- PCI Express
- High Definition Multi-Media Interface(HDMI)
- HDMI Interfaces

Mechanical Data

- DFN1610-6L package
- Molding compound flammability rating: UL 94V-0
- Marking: Marking Code
- Packaging: Tape and Reel
- RoHS/WEEE Compliant

Marking



Ordering information

Order code	Package	Base qty	Delivery mode
BDFN1610A052U	DFN1610-6L	3k	Tape and reel

BORN SEMICONDUCTOR , INC. ALL RIGHT RESERVED

Specifications are subject to change without notice.
Please refer to http://*www.born-tw.com* for current information.

Revision: 2022-Jan-1-A

BDFN1610A052U

ESD Protection Diode Array

Electrical Parameters (T_A = 25°C unless otherwise noted)

Symbol	Parameter
I_{PP}	Maximum Reverse Peak Pulse Current
V_C	Clamping Voltage @ I_{PP}
V_{RWM}	Peak Reverse Working Voltage
I_R	Reverse Leakage Current @ V_{RWM}
V_{BR}	Breakdown Voltage @ I_T
I_T	Test Current

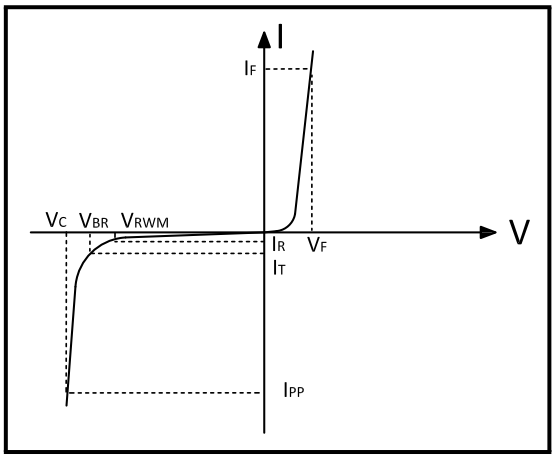

Note:8/20us pulse Waveform.

Absolute Maximum Rating

Rating	Symber	Value	Units
Peak Pulse Power (tp =8/20μs)	P_{PP}	75	Watts
Peak Pulse Current (tp =8/20μs)	I_{PP}	5	A
ESD per IEC 61000-4-2 (Air) ESD per IEC 61000-4-2 (Contact)	V_{ESD}	25 20	KV
Lead Soldering Temperature	T_L	260(10seconds)	°C
Junction Temperature	T_J	-55 to + 150	°C
Storage Temperature	T_{stg}	-55 to + 150	°C

Electrical Characteristics

Parameter	Symber	Conditions	Min	Typical	Max	Units
Reverse Stand-Off Voltage	V_{RWM}	–	–	–	5.0	V
Reverse Breakdown Voltage	V_{BR}	I_T=1mA	6.0	7.2	9.5	V
Reverse Leakage Current	I_R	V_{RWM}=5V,T=25°C	–	–	0.5	uA
Peak Pulse Current	I_{PP}	tp =8/20us	–	–	5	A
Clamping Voltage	V_C	I_{PP}=5A, tp =8/20us	–	14	15	V
Junction Capacitance	C_j	V_R=0V,f=1MHZ,I/O to I/O	–	0.20	0.4	pF
		V_R=0V,f=1MHZ,I/O to GND	–	0.45	0.6	

BORN SEMICONDUCTOR , INC. ALL RIGHT RESERVED

Specifications are subject to change without notice.
Please refer to http://*www.born-tw.com* for current information.

BDFN1610A052U

ESD Protection Diode Array

Typical Characteristics

Figure 1: Peak Pulse Power vs. Pulse Time

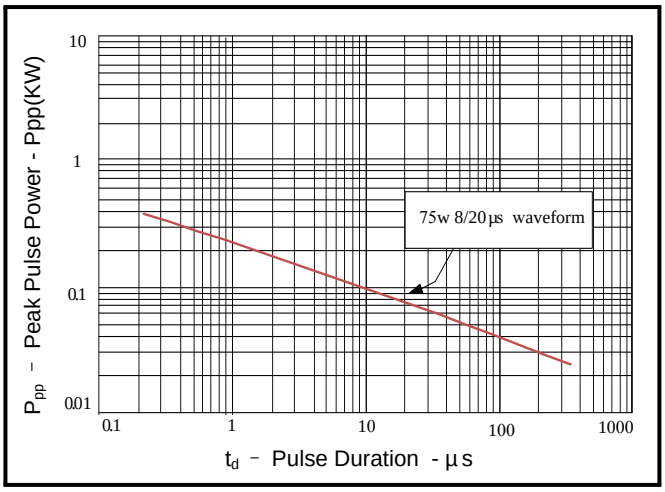

Figure 2: Power Derating Curve

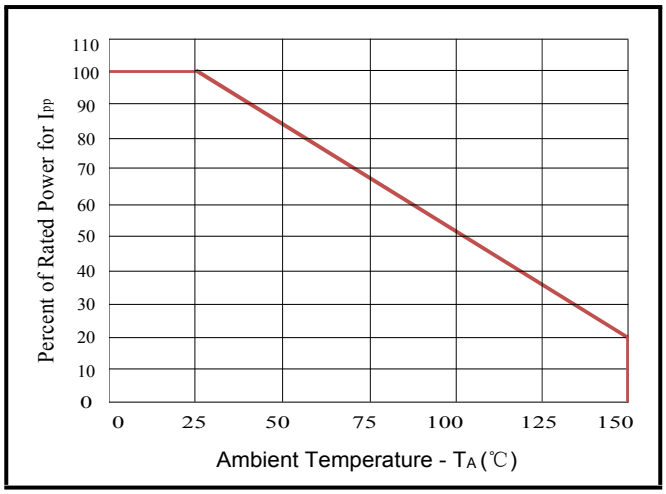

Figure 3: Pulse Waveform

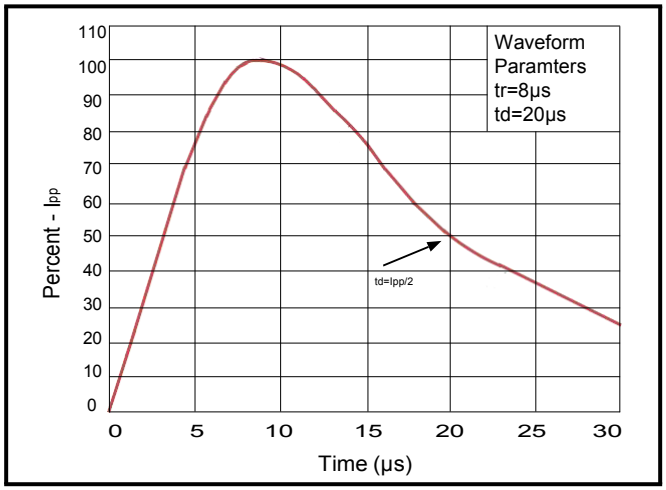

Figure 4: Clamping Voltage vs. I_{PP}

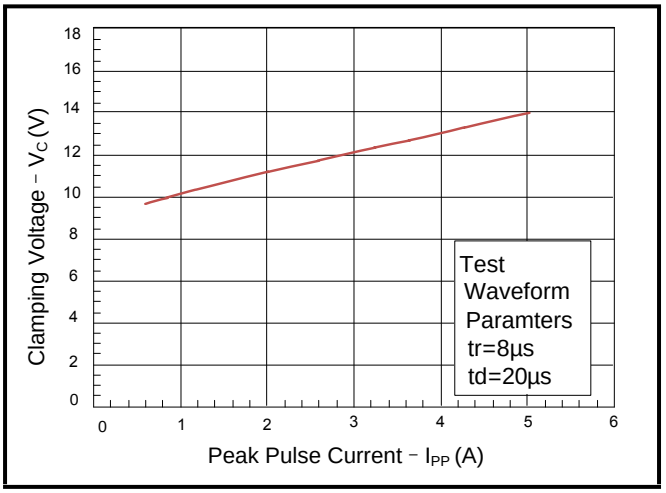

BORN SEMICONDUCTOR , INC. ALL RIGHT RESERVED

Specifications are subject to change without notice.
Please refer to http://*www.born-tw.com* for current information.

BDFN1610A052U

ESD Protection Diode Array

Outline Drawing – DFN1610-6L

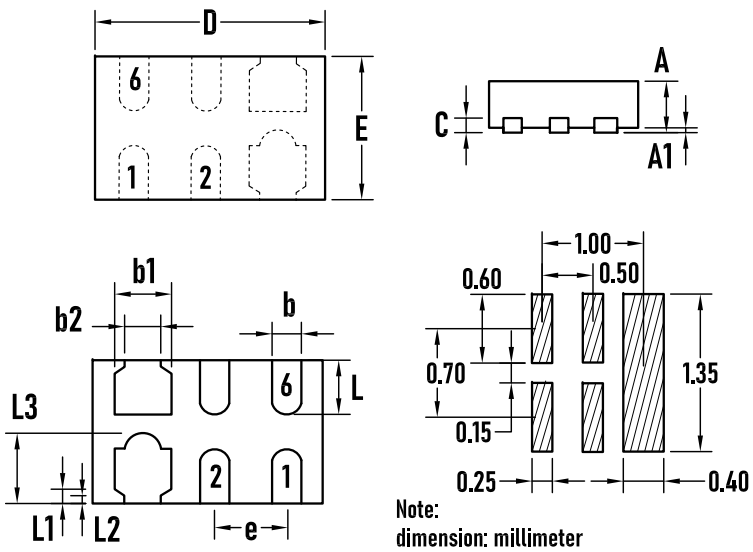

SYMBOL	MILLIMETER		
	MIN.	Typ.	MAX.
A	0.50	0.55	0.60
A1	–	0.02	0.05
b	0.15	0.20	0.25
b1	0.35	0.40	0.45
b2	0.20	0.25	0.30
C	0.10	0.15	0.20
D	1.55	1.60	1.65
e	0.50BSC		
E	0.95	1.00	1.05
L	0.33	0.38	0.43
L1	0.10REF		
L2	0.05REF		
L3	0.49REF		

Packaging Tape - DFN1610-6L

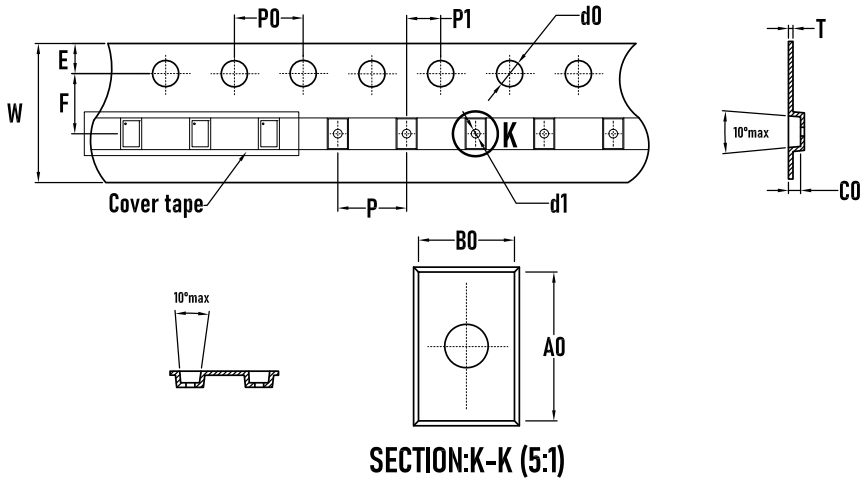

SYMBOL	MILLIMETER
A0	1.11±0.05
B0	1.72±0.05
d0	$1.5^{+0.1}_{-0}$
d1	0.50±0.1
E	1.75±0.10
F	3.50±0.05
K0	0.68±0.05
P	4.00±0.1
P0	4.00±0.10
P1	2.00±0.05
W	$8.00^{+0.03}_{-0.01}$
T	0.25±0.05

Packaging Reel

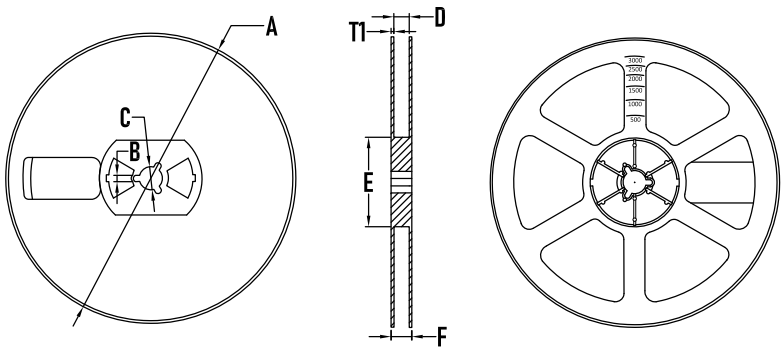

SYMBOL	MILLIMETER
A	178±1
B	3.5±0.2
C	14.3±0.2
D	9.8^{+2}_{-1}
E	54.5±0.5
F	12.4±0.5
T1	1.0±0.2
Quantity	3000PCS

BORN SEMICONDUCTOR , INC. ALL RIGHT RESERVED

Specifications are subject to change without notice.
Please refer to http://*www.born-tw.com* for current information.

Revision: 2022-Jan-1-A