WTM80N65FMP

650V N-Channel Super -Junction MOSFET

General Description

This Power MOSFET is produced using WPMtek's Advanced Super-Junction technology.
This advanced technology has been especially tailored to minimize conduction loss, provide superior switching performance, and withstand high energy pulse in the avalanche and commutation mode.
These devices are well suited for AC/DC power conversion

Features

- 80A, 650V, RDS(on) typ.= 36mΩ@VGS =10 V
- Low gate charge (typical 142nC)
- High ruggedness
- Fast switching
- 100% avalanche tested
- Improved dv/dt capability

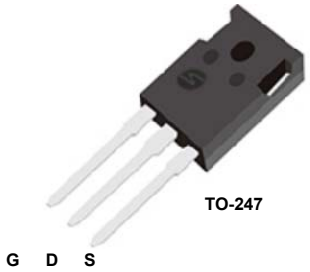

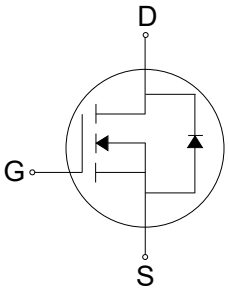

Absolute Maximum Ratings

TC = 25°C unless otherwise noted

Symbol	Parameter		WTM80N65FMP	Units
VDSS	Drain-Source Voltage		650	V
ID	Drain Current	- Continuous (TC = 25℃)	80	A
		- Continuous (TC = 100℃)	45*	A
IDM	Drain Current - Pulsed	(Note 1)	226	A
VGSS	Gate-Source Voltage		±20	V
EAS	Single Pulsed Avalanche Energy	(Note 2)	2890	mJ
dv/dt	Peak Diode Recovery dv/dt	(Note 3)	45	V/ns
PD	Power Dissipation (TC = 25℃)		355	W
		- Derate above 25℃	2.86	W/℃
TJ, TSTG	Operating and Storage Temperature Range		-55 to +150	℃
TL	Maximum lead temperature for soldering purposes, 1/8" from case for 5 seconds		300	℃

*Drain current limited by maximum junction temperature.

Thermal Characteristics

Symbol	Parameter	Value	Units
RθJC	Thermal Resistance, Junction-to-Case	0.35	℃/W
RθJS	Thermal Resistance, Case-to-Sink Typ.	0.5	℃/W
RθJA	Thermal Resistance, Junction-to-Ambient	60	℃/W

Electrical Characteristics (TC = 25 °C unless otherwise noted)

Symbol	Parameter	Test Conditions	Min	Typ	Max	Units
Off Characteristics						
BVDSS	Drain-Source Breakdown Voltage	VGS = 0V,ID = 250uA, TJ=25℃	650	-	-	V
		VGS = 0V,ID = 250uA, TJ=150℃	-	650	-	V
ΔBVDSS ΔTJ	Breakdown Voltage Temperature coefficient	ID = 250uA, referenced to 25°C	-	0.6	-	V/°C
IDSS	Drain-Source Leakage Current	VDS =650V, VGS = 0V	-	-	1	uA
		VDS =480V, TC = 125 °C	-	10	-	uA
IGSS	Gate-Source Leakage, Forward	VGS = 20V, VDS = 0V	-	-	100	nA
	Gate-source Leakage, Reverse	VGS = -20V, VDS = 0V	-	-	-100	nA
On Characteristics						
VGS(th)	Gate Threshold Voltage	VDS = VGS, ID = 250uA	2.0	3.0	4.0	V
RDS(ON)	Static Drain-Source On-state Resistance	VGS =10 V, ID = 28A	-	36	42	mΩ
Dynamic Characteristics						
Ciss	Input Capacitance	VGS =0 V, VDS =25V, f = 1MHz	-	6018	-	pF
Coss	Output Capacitance		-	245	-	
Crss	Reverse Transfer Capacitance		-	33	-	
Dynamic Characteristics						
td(on)	Turn-on Delay Time	VDD =300V, ID =40A, RG =25Ω	`	48	-	nS
tr	Rise Time		-	114	-	
td(off)	Turn-off Delay Time		-	179	-	
tf	Fall Time		-	113	-	
Qg	Total Gate Charge	VDS =480V, VGS =40V, ID =20A	-	142	-	nC
Qgs	Gate-Source Charge		-	39	-	
Qgd	Gate-Drain Charge(Miller Charge)		-	59	-	

Source-Drain Diode Ratings and Characteristics

Symbol	Parameter	Test Conditions	Min.	Typ.	Max.	Unit.
IS	Maximum Continuous Drain-Source Diode Forward Current		-	-	80	A
ISM	Maximum Pulsed Drain-Source Diode Forward Current		-	-	226	
VSD	Diode Forward Voltage	IS =40A, VGS =0V	-	-	1.5	V
trr	Reverse Recovery Time	IS =40A, VGS=0V, dIF/dt=100A/us	-	625	-	nS
Qrr	Reverse Recovery Charge		-	2.5	-	uC

NOTES

1. Repeativity rating : pulse width limited by junction temperature
2. L =40mH, IAS =12A, VDD = 50V, RG = 25Ω, Starting TJ = 25°C
3. ISD ≤ ID, di/dt ≤ 200A/us, VDD ≤ BVDSS, Starting TJ = 25°C
4. Pulse Test : Pulse Width ≤ 300us, Duty Cycle ≤ 2%
5. Essentially independent of operating temperature.

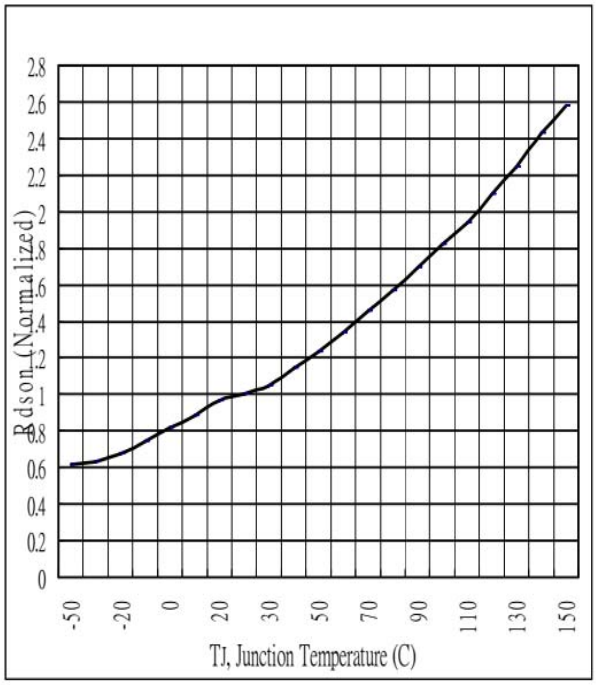

Fig 1. On-Resistance Variation with vs. Temperature

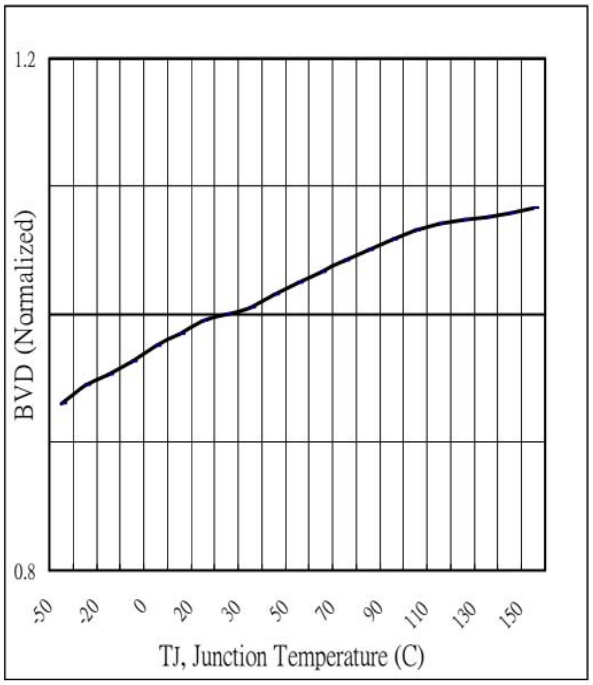

Fig.2 Breakdown Voltage Variation vs. Temperature

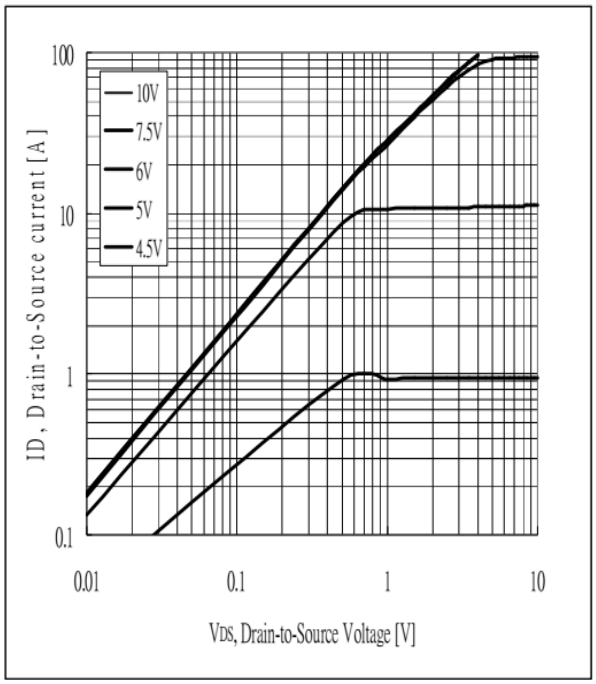

Fig 3. Typical Output Characteristics

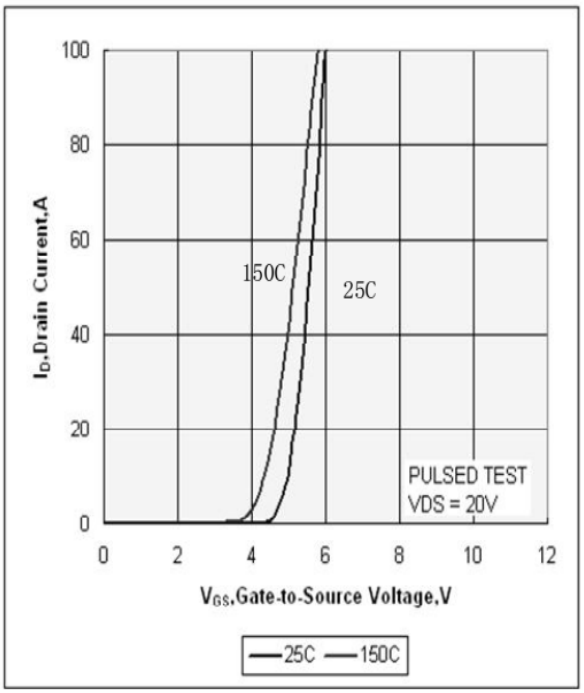

Fig 4. Typical Transfer Characteristics

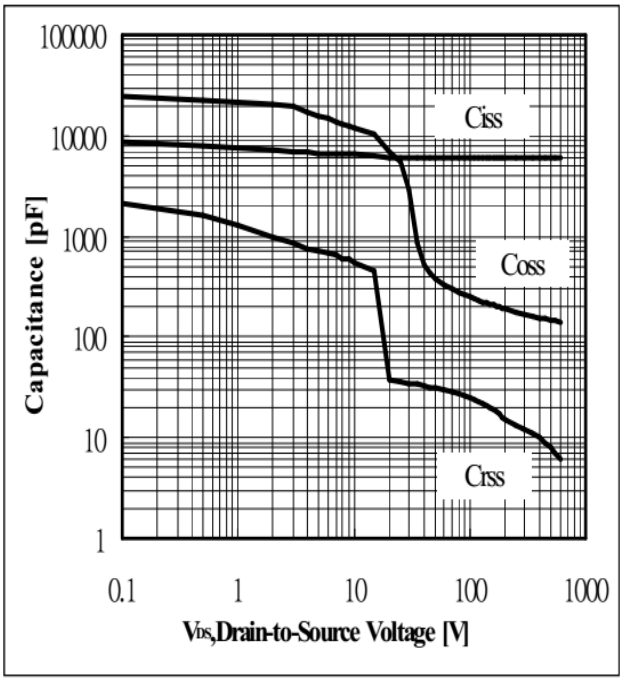

Fig 5. Typical Capacitance Vs. Drain-to-Source Voltage

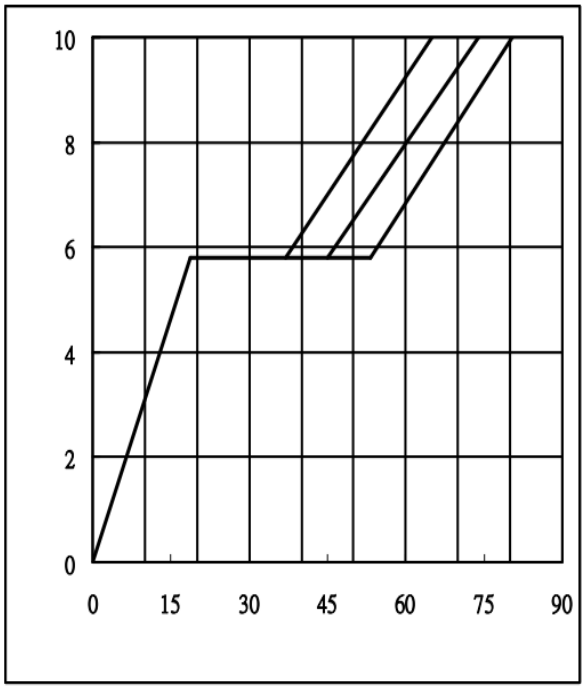

Fig 6. Typical Gate Charge Vs. Gate-to-Source Voltage

Gate Charge Test Circuit & Waveform

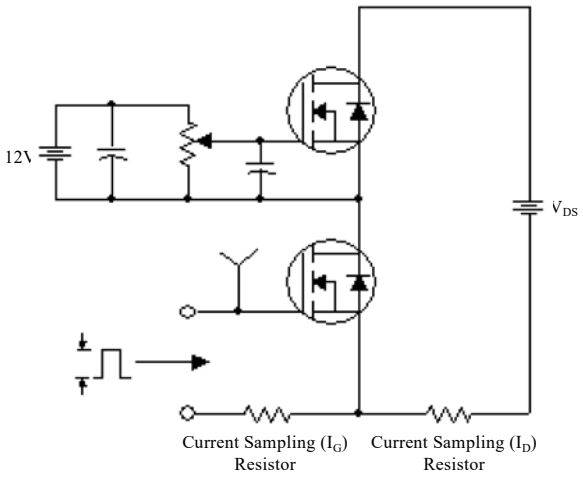

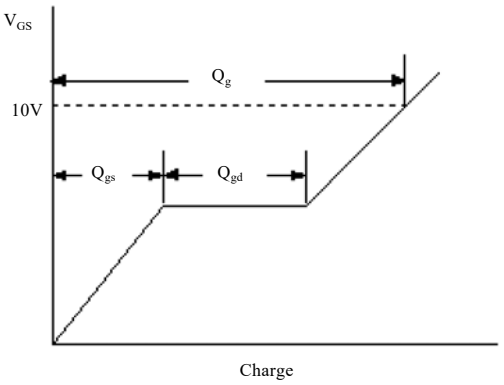

Resistive Switching Test Circuit & Waveforms

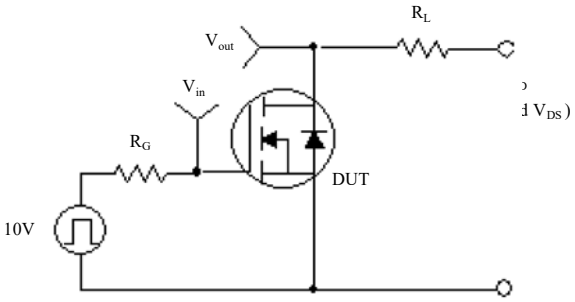

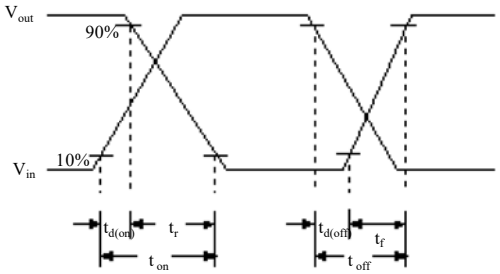

Unclamped Inductive Switching Test Circuit & Waveforms

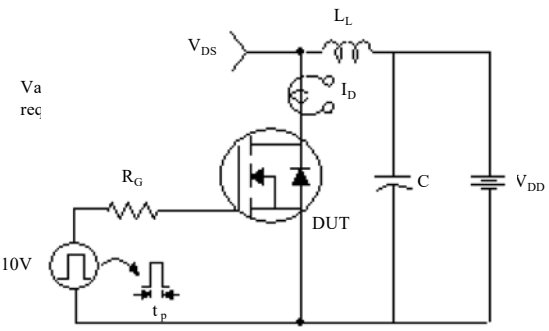

$$E_{AS} = \frac{1}{2} L_L I_{AS}^2 \frac{BV_{DSS}}{BV_{DSS} - V_{DD}}$$

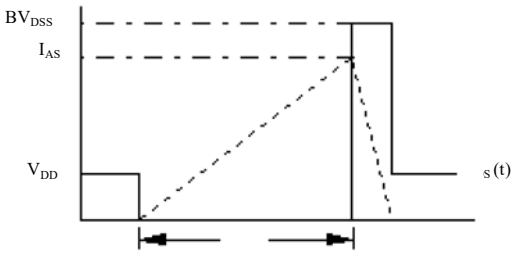

Peak Diode Recovery dv/dt Test Circuit & Waveforms

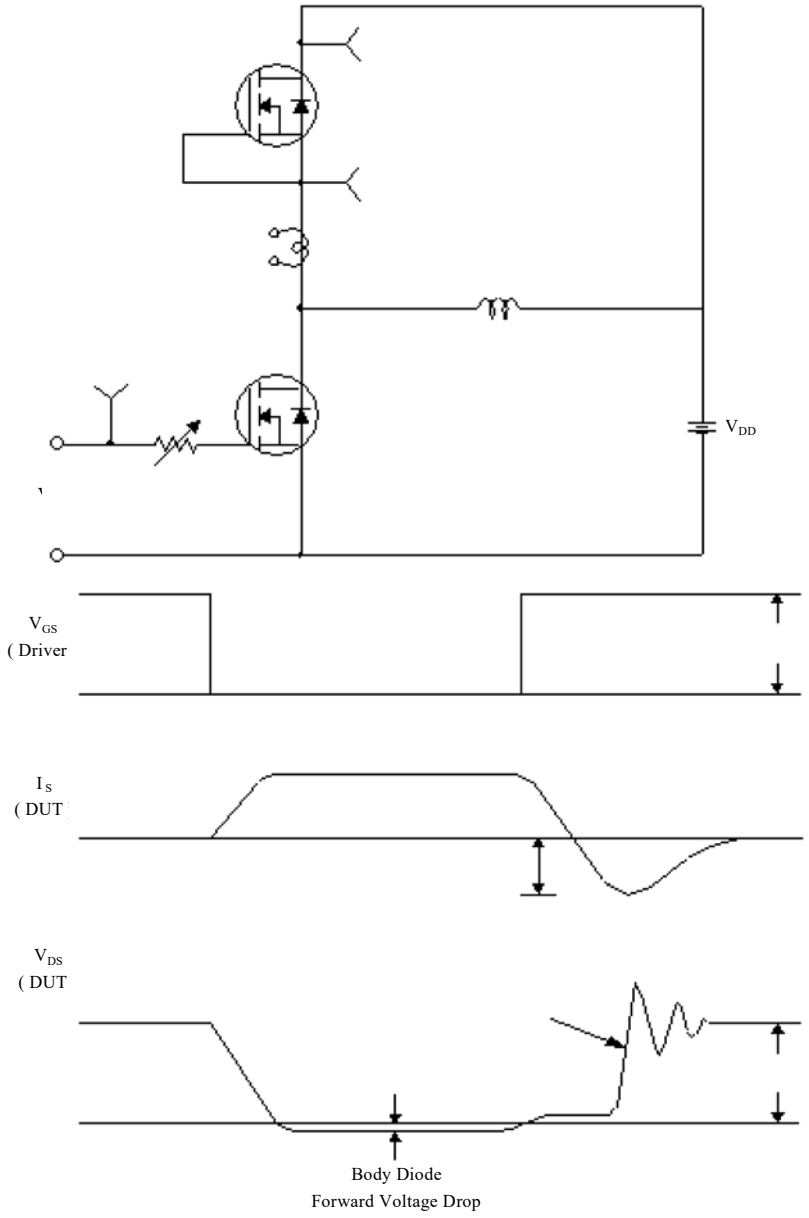

TO-247 OUTLINE

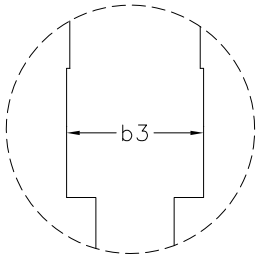

DETAIL F

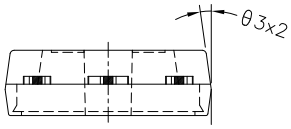

SIDE VIEW

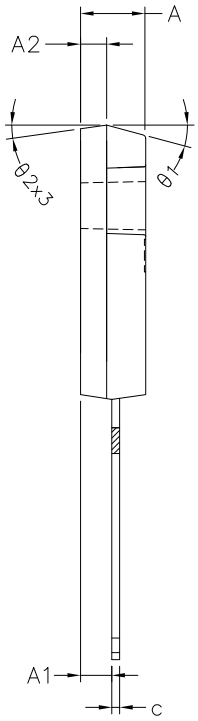

SIDE VIEW

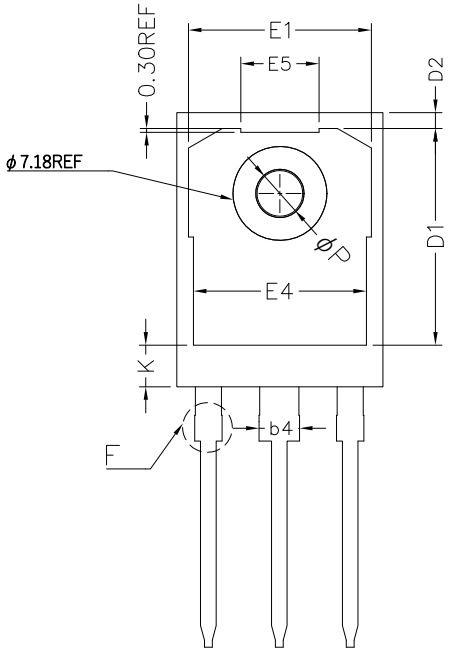

BOTTOM VIEW

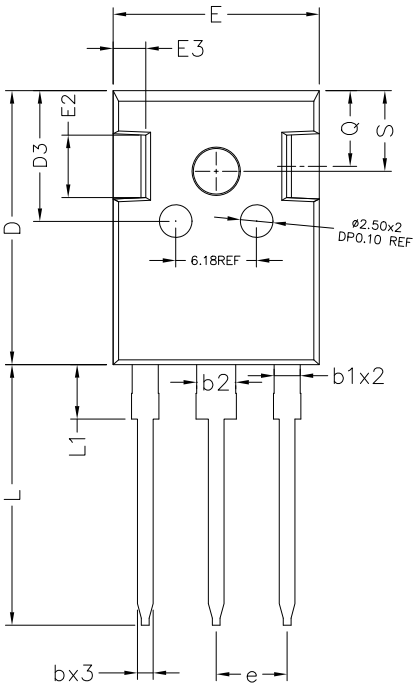

TOP VIEW

COMMON DIMENSIONS
(UNITS OF MEASURE IS mm)

	MIN	NORMAL	MAX
A	4.900	5.000	5.100
A1	2.300	2.400	2.500
A2	1.900	2.000	2.100
b	1.070	1.200	1.330
b1	1.910	2.000	2.160
b2	2.870	3.000	3.160
b3	1.910	2.100	2.410
b4	2.870	3.000	3.380
c	0.550	0.600	0.680
D	20.000	21.000	21.100
D1	16.250	16.950	17.650
D2		1.200REF	
D3		10.000REF	
E	15.700	15.800	15.900
E1	13.100	14.020	14.150
E2	3.680	–	5.100
E3	1.000	–	1.900
E4	12.380	13.260	13.430
E5		5.990REF	
e		5.440BSC	
L	19.810	19.950	20.320
L1	4.100	–	4.400
ϕP	3.500	–	3.650
Q	5.490	–	6.000
S	6.040	–	6.300
θ1		15.0°REF	
θ2		8.0°REF	
θ3		8.0°REF	
K		3.190REF	

WPMtek reserves the right to make changes to the product specification and data in this document without notice. WPMtek makes no warranty, representation or guarantee regarding the suitability of its products for any particu lar purpose, nor does WPMtek assume any liability arising from the application or use of any products or circuits, and specifically disclaims any and all liability, including without limitation special, consequential or incidental damages. Any enquiry ,please write to sales@wpmtek.com for futher information.