REVISIONS					
REV.	ECN NO.	LOCATION	DESCRIPTION	DATE	DESIGN
A0	N/A		INITIAL RELEASE	/	/
A1	N/A		图面新增2PIN卡扣样式说明，升级整理图面	2024.9.25	阿树

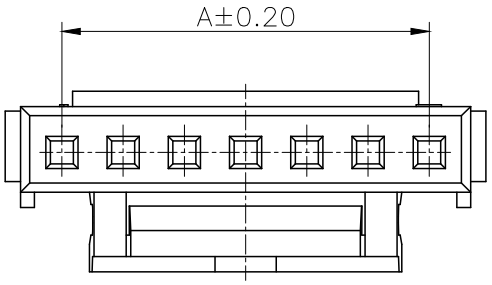

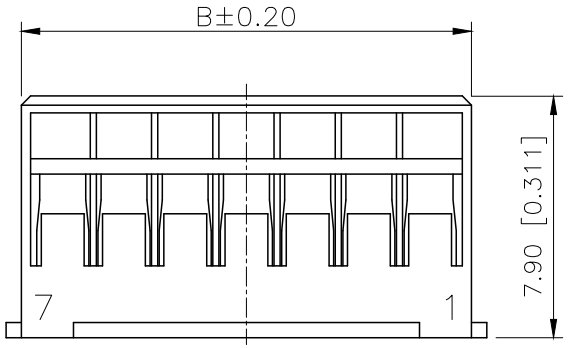

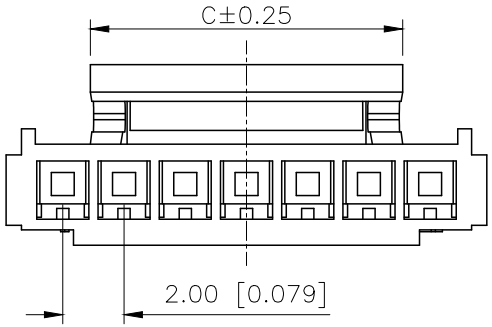

■SPECIFICATIONS
- Voltage rating:250V AC/DC
- Current rating:2A AC/DC
- Withstanding Voltage:800V AC/minute
- Temperature range:−40°C~+125°C
- Insulation resistance:≥1000MΩ
- Contact resistance:≤20mΩ

Applicable Wire:30~24AWG

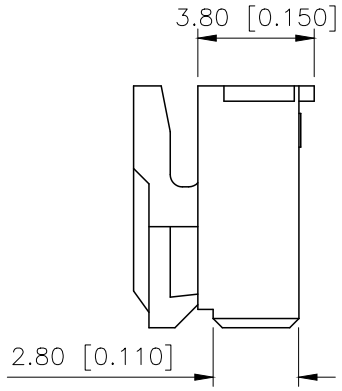

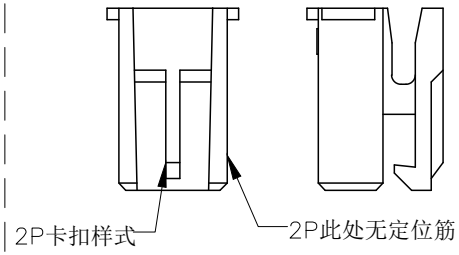

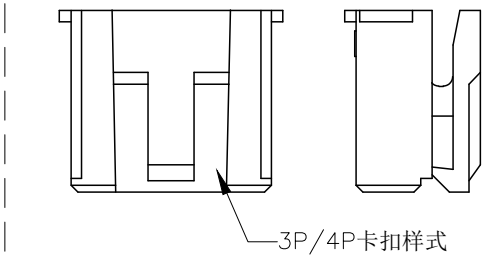

PART NO.:

X2011 H M−11 A−N0
① ② ③ ④ ⑤ ⑥

①Series No
②Category:H−HSG
③Category:M−Male Housing
④Row No.Pin No:XX−02~15Pin
⑤Plug the Pin &Special No.:A−No Lock
⑥Material:N0−PA66 UL94V−0

Poles	Dimensions(mm)			Poles	Dimensions(mm)		
	A	B	C		A	B	C
02	2.00	4.70	3.30	10	18.00	20.70	12.30
03	4.00	6.70	3.30	11	20.00	22.70	16.30
04	6.00	8.70	4.30	12	22.00	24.70	16.30
05	8.00	10.70	4.30	13	24.00	26.70	16.30
06	10.00	12.70	8.30	14	26.00	28.70	16.30
07	12.00	14.70	10.30	15	28.00	30.70	16.30
08	14.00	16.70	10.30	16	30.00	32.70	16.30
09	16.00	18.70	10.30				

X2011HM−11A−N0	PA66	X2011W	X2011TF
PART NO	Material	Suitable XKB Wafer	Suitable XKB Terminal

AuGLAR	±5°
X.	±0.40
X.x	±0.30
X.xx	±0.20
X.xxx	±0.15
UNSPECIFIED TOLERAuCES	

XKB 星创 Connection

XKB INDUSTRIAL PRECISION CO.,LIMITED

DESIGN	阿树	VIEW:	MODEL TYPE: 2.00mm Crimp Style Connector
CHECKED		UNIT: mm/in	PART NO.: X2011HM−11A−N0
APPROVED		SIZE: A4	DWG NO.:

SCALE	PAGE	REVISION
N/A	1/1	A1