GC3M0015065K
Silicon Carbide Power MOSFET
N-Channel Enhancement Mode

Features

- Optimized package with separate driver source pin
- High blocking voltage with low on-resistance
- High-speed switching with low capacitances
- Fast intrinsic diode with low reverse recovery (Q_{rr})
- Halogen free, RoHS compliant



TO-247-4

Package

Benefits

- Reduce switching losses and minimize gate ringing
- Higher system efficiency
- Reduce cooling requirements
- Increase power density
- Increase system switching frequency

Applications

- EV chargers
- Solar inverters
- UPS
- SMPS
- DC/DC converters

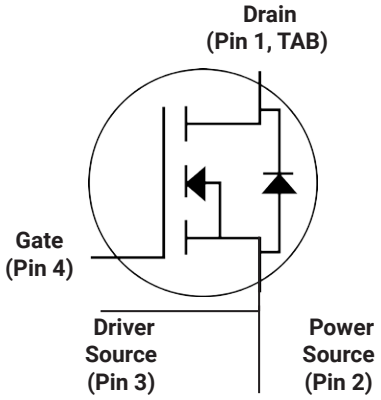

Part Number	Package	Marking
GC3M0015065K	TO 247-4	GC3M0015065

Maximum Ratings (T_C=25˚C, unless otherwise specified)

Symbol	Parameter	Value	Unit	Note
V_{DSmax}	Drain - Source Voltage	650	V	
V_{GSmax}	Gate - Source voltage	-8/+19	V	Note 1
I_D	Continuous Drain Current, V_{GS} = 15 V, T_C = 25˚C	120	A	Fig. 19 Note 2
	Continuous Drain Current, V_{GS} = 15 V, T_C = 100˚C	96		
$I_{D(pulse)}$	Pulsed Drain Current, Pulse width t_p limited by T_{jmax}	418	A	
P_D	Power Dissipation, T_C=25˚C, T_J = 175 ˚C	416	W	Fig. 20
T_J , T_{stg}	Operating Junction and Storage Temperature	-40 to +175	˚C	
T_L	Solder Temperature, 1.6mm (0.063") from case for 10s	260	˚C	
M_d	Mounting Torque, (M3 or 6-32 screw)	1 8.8	Nm lbf-in	

Note (1): Recommended turn off / turn on gate voltage V_{GS} - 4V...0V / +15V
Note (2): Package limited to 120 A

Copyright © 2022 Wuxi Gwok Semiconductor Co.,Ltd All rights reserved.

Electrical Characteristics (T_C = 25˚C unless otherwise specified)

Symbol	Parameter	Min.	Typ.	Max.	Unit	Test Conditions	Note
$V_{(BR)DSS}$	Drain-Source Breakdown Voltage	650			V	V_{GS} = 0 V, I_D = 100 µA	
$V_{GS(th)}$	Gate Threshold Voltage	1.8	2.3	3.6	V	V_{DS} = V_{GS}, I_D = 15.5 mA	Fig. 11
			1.9		V	V_{DS} = V_{GS}, I_D = 15.5 mA, T_J = 175ºC	
I_{DSS}	Zero Gate Voltage Drain Current		1	50	µA	V_{DS} = 650 V, V_{GS} = 0 V	
I_{GSS}	Gate-Source Leakage Current		10	250	nA	V_{GS} = 15 V, V_{DS} = 0 V	
$R_{DS(on)}$	Drain-Source On-State Resistance	10.5	15	21	mΩ	V_{GS} = 15 V, I_D = 55.8A	Fig. 4, 5,6
			20			V_{GS} = 15 V, I_D = 55.8A, T_J = 175ºC	
g_{fs}	Transconductance		42		S	V_{DS}= 20 V, I_{DS}= 55.8 A	Fig. 7
			40			V_{DS}= 20 V, I_{DS}= 55.8 A, T_J = 175ºC	
C_{iss}	Input Capacitance		5011		pF	V_{GS} = 0 V, V_{DS} = 400 V f = 100 Khz V_{AC} = 25 mV	Fig. 17, 18
C_{oss}	Output Capacitance		289				
C_{rss}	Reverse Transfer Capacitance		31				
$C_{o(er)}$	Effective Output Capacitance (Energy Related)		357				Note: 3
$C_{o(tr)}$	Effective Output Capacitance (Time Related)		516				Note: 3
E_{oss}	C_{oss} Stored Energy		29		µJ		Fig. 16
E_{ON}	Turn-On Switching Energy (Body Diode)		401		µJ	V_{DS} = 400 V, V_{GS} = -4 V/15 V, I_D = 55.8 A, $R_{G(ext)}$ = 5 Ω, L= 57.6 µH, T_J = 175ºC FWD = Internal Body Diode of MOSFET	Fig. 25
E_{OFF}	Turn Off Switching Energy (Body Diode)		254				
E_{ON}	Turn-On Switching Energy (External Diode)		234		µJ	V_{DS} = 400 V, V_{GS} = -4 V/15 V, I_D = 55.8 A, $R_{G(ext)}$ = 5 Ω, L= 57.6 µH, T_J = 175ºC FWD = External SiC DIODE	Fig. 25
E_{OFF}	Turn Off Switching Energy (External Diode)		303				
$t_{d(on)}$	Turn-On Delay Time		23		ns	V_{DD} = 400 V, V_{GS} = -4 V/15 V I_D = 55.8 A, $R_{G(ext)}$ = 5 Ω, L= 57.6 µH Timing relative to V_{DS} Inductive load	Fig. 26
t_r	Rise Time		32				
$t_{d(off)}$	Turn-Off Delay Time		57				
t_f	Fall Time		15				
$R_{G(int)}$	Internal Gate Resistance		1.5		Ω	f = 1 MHz, V_{AC} = 25 mV	
Q_{gs}	Gate to Source Charge		53		nC	V_{DS} = 400 V, V_{GS} = -4 V/15 V I_D = 55.8 A Per IEC60747-8-4 pg 21	Fig. 12
Q_{gd}	Gate to Drain Charge		58				
Q_g	Total Gate Charge		188				

Note (3): $C_{o(er)}$, a lumped capacitance that gives same stored energy as Coss while Vds is rising from 0 to 400V
$C_{o(tr)}$, a lumped capacitance that gives same charging time as Coss while Vds is rising from 0 to 400V

Copyright © 2022 Wuxi Gwok Semiconductor Co.,Ltd All rights reserved.

Reverse Diode Characteristics (T_C = 25˚C unless otherwise specified)

Symbol	Parameter	Typ.	Max.	Unit	Test Conditions	Note
V_{SD}	Diode Forward Voltage	4.7		V	V_{GS} = -4 V, I_{SD} = 27.9 A, T_J = 25 °C	Fig. 8, 9, 10
		4.2		V	V_{GS} = -4 V, I_{SD} = 27.9 A, T_J = 175 °C	
I_S	Continuous Diode Forward Current		79	A	V_{GS} = -4 V, T_C = 25˚C	
$I_{S,\ pulse}$	Diode pulse Current		223	A	V_{GS} = -4 V, pulse width t_P limited by T_{jmax}	
t_{rr}	Reverse Recover time	22		ns	V_{GS} = -4 V, I_{SD} = 55.8 A, V_R = 400 V dif/dt = 4000 A/µs, T_J = 175 °C	
Q_{rr}	Reverse Recovery Charge	510		nC		
I_{rrm}	Peak Reverse Recovery Current	39		A		
t_{rr}	Reverse Recover time	26		ns	V_{GS} = -4 V, I_{SD} = 55.8 A, V_R = 400 V dif/dt = 2500 A/µs, T_J = 175 °C	
Q_{rr}	Reverse Recovery Charge	432		nC		
I_{rrm}	Peak Reverse Recovery Current	28		A		

Thermal Characteristics

Symbol	Parameter	Typ.	Unit	Test Conditions	Note
$R_{\theta JC}$	Thermal Resistance from Junction to Case	0.35	°C/W		Fig. 21
$R_{\theta JA}$	Thermal Resistance From Junction to Ambient	40			

Copyright © 2022 Wuxi Gwok Semiconductor Co.,Ltd All rights reserved.

Typical Performance

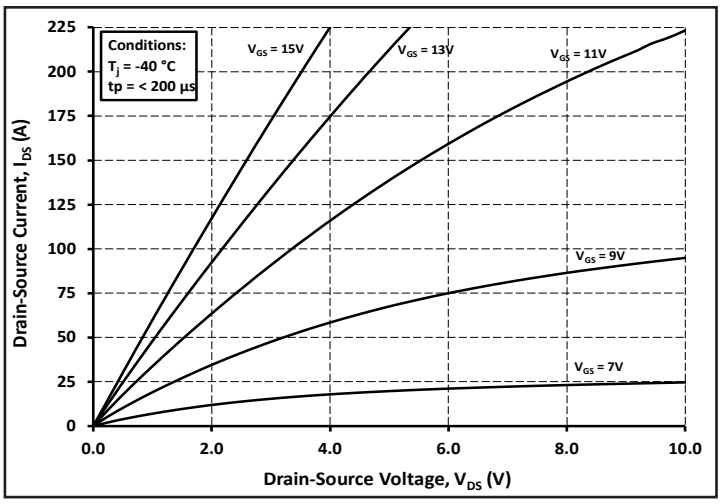

Figure 1. Output Characteristics T_J = -40 °C

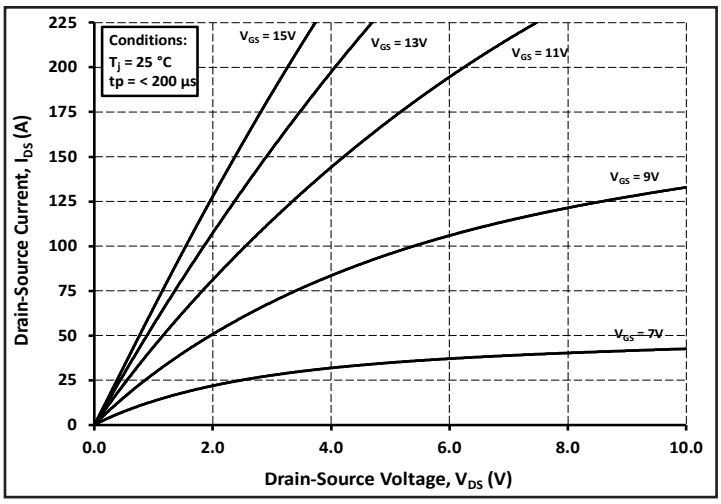

Figure 2. Output Characteristics T_J = 25 °C

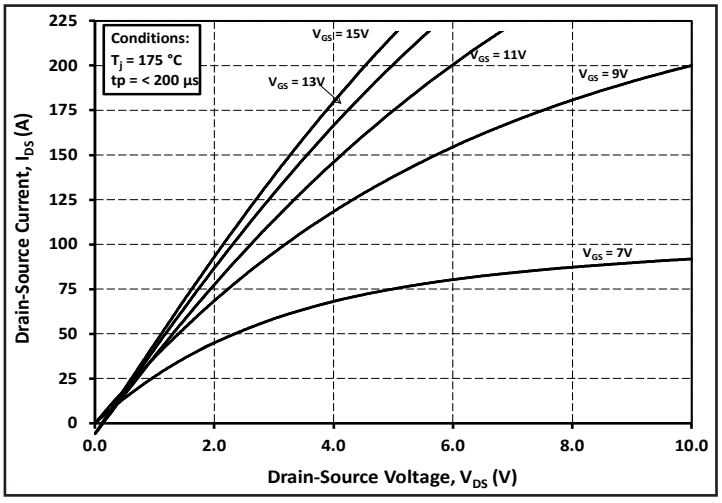

Figure 3. Output Characteristics T_J = 175 °C

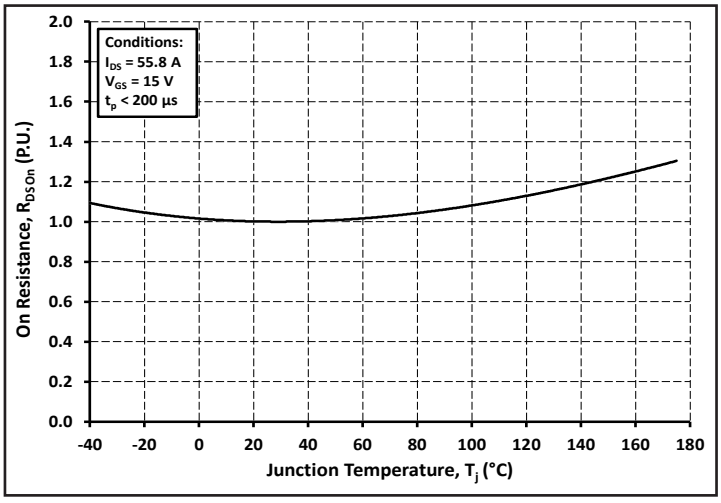

Figure 4. Normalized On-Resistance vs. Temperature

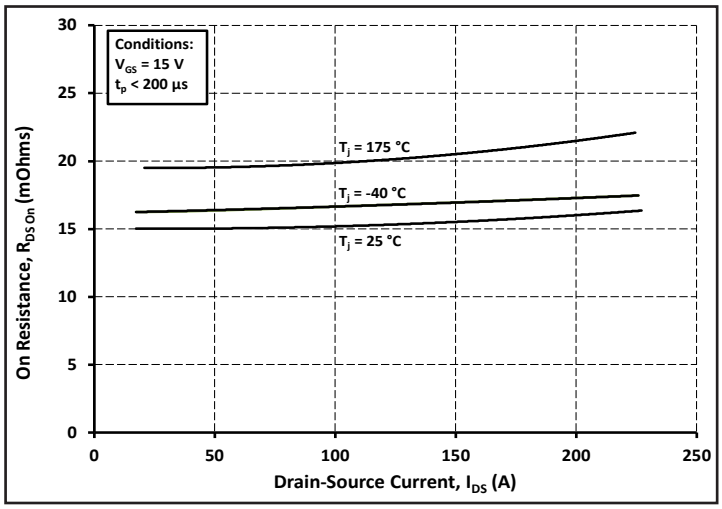

Figure 5. On-Resistance vs. Drain Current
For Various Temperatures

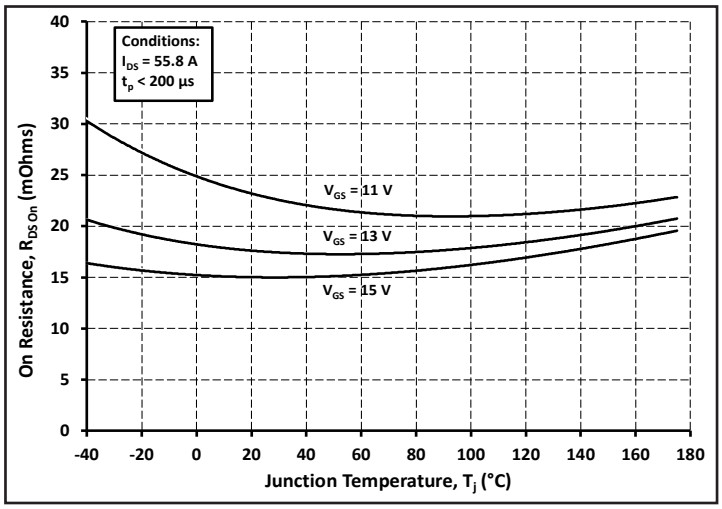

Figure 6. On-Resistance vs. Temperature
For Various Gate Voltage

Copyright © 2022 Wuxi Gwok Semiconductor Co.,Ltd All rights reserved.

Typical Performance

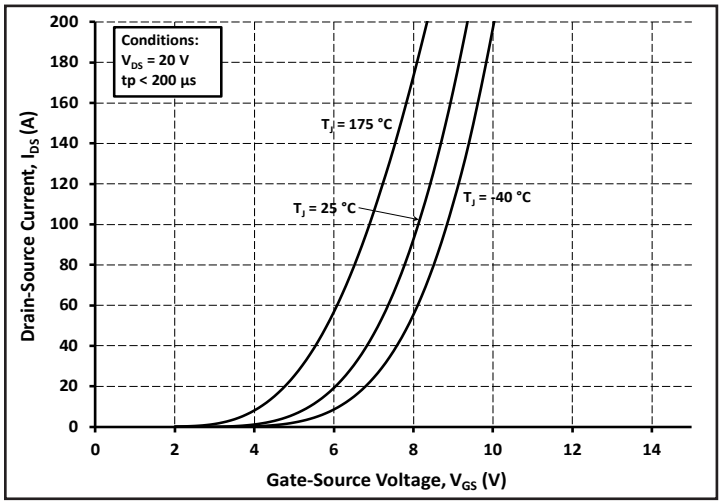

Figure 7. Transfer Characteristic for Various Junction Temperatures

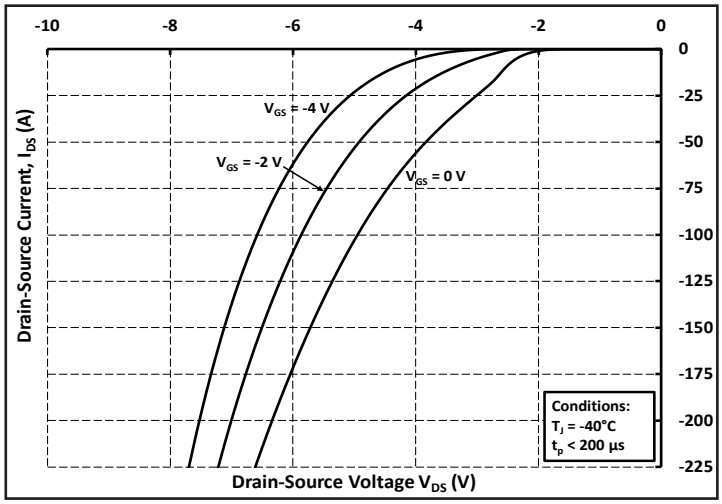

Figure 8. Body Diode Characteristic at -40 °C

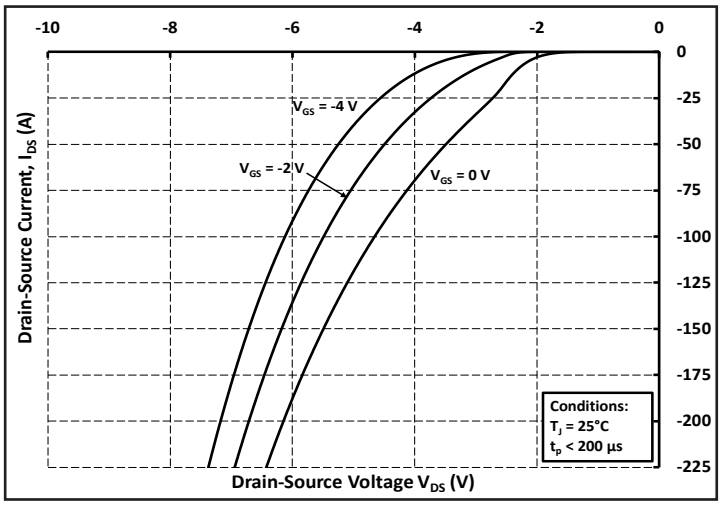

Figure 9. Body Diode Characteristic at 25 °C

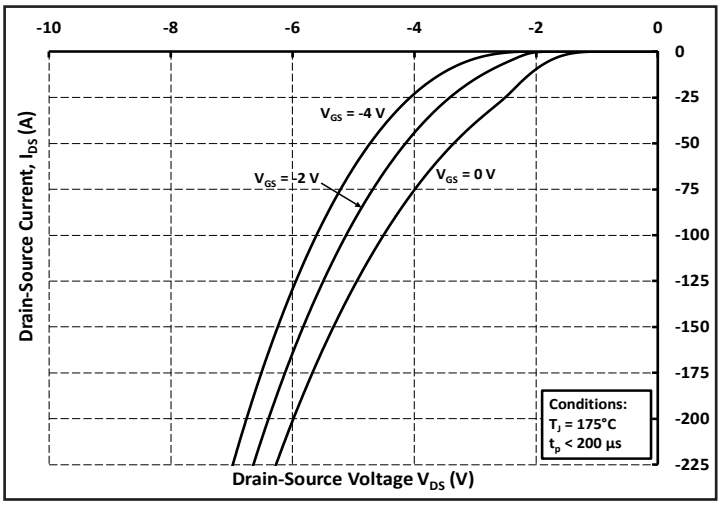

Figure 10. Body Diode Characteristic at 175 °C

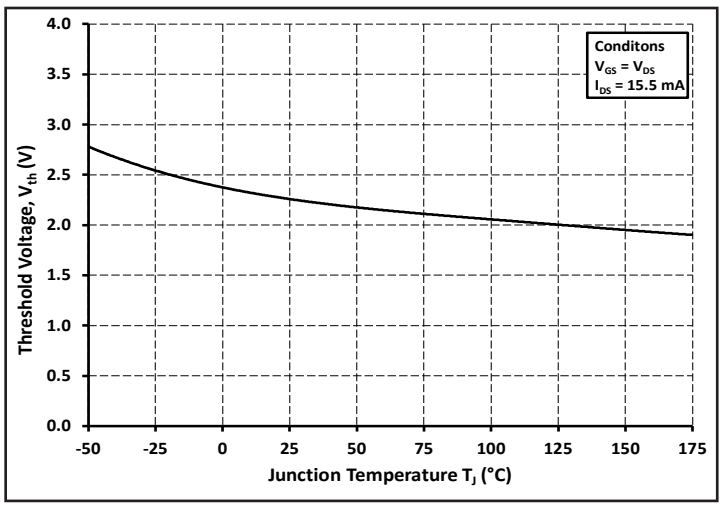

Figure 11. Threshold Voltage vs. Temperature

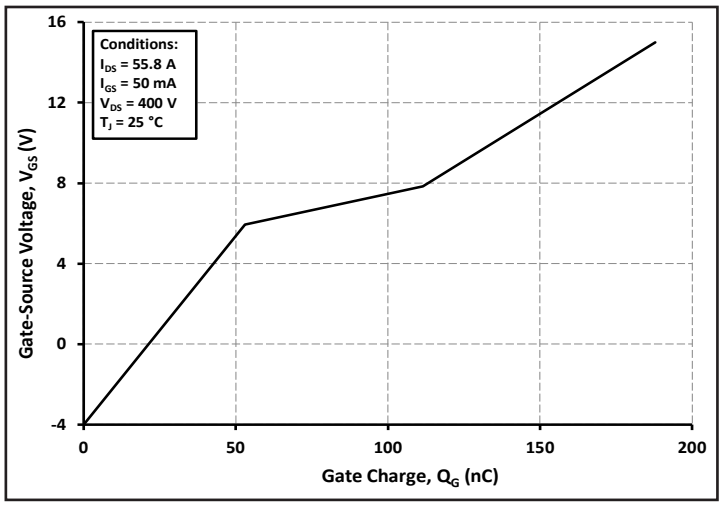

Figure 12. Gate Charge Characteristics

Copyright © 2022 Wuxi Gwok Semiconductor Co.,Ltd All rights reserved.

Typical Performance

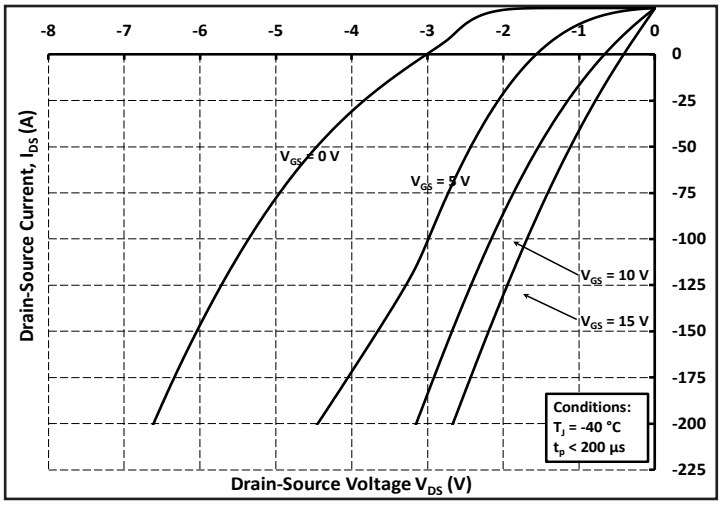

Figure 13. 3rd Quadrant Characteristic at -40 °C

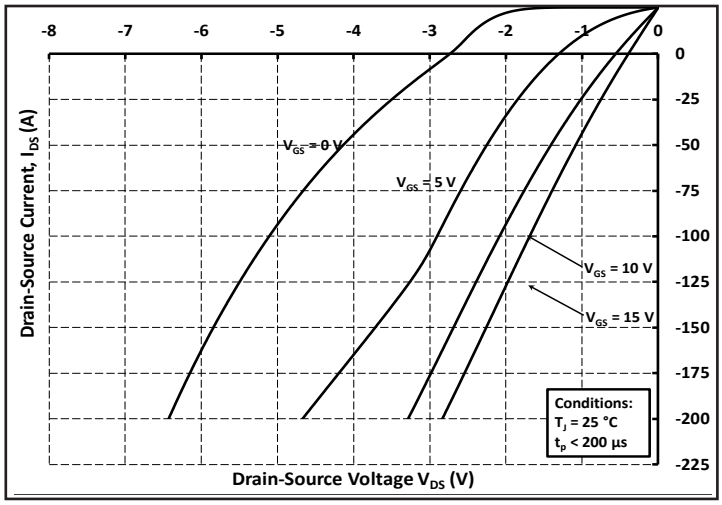

Figure 14. 3rd Quadrant Characteristic at 25 °C

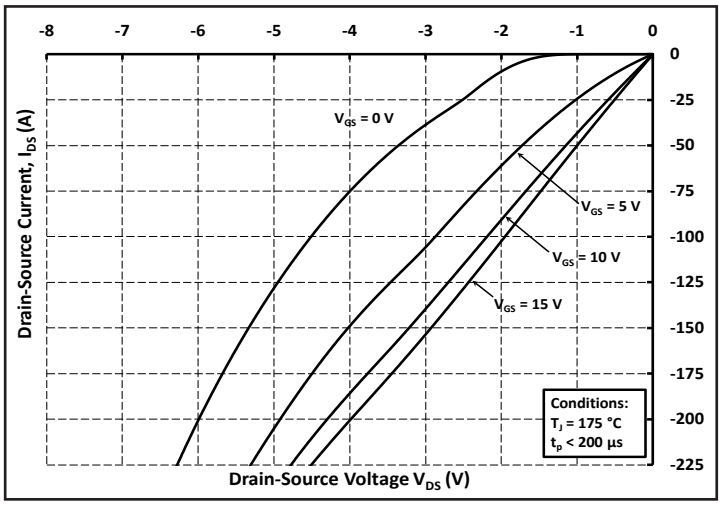

Figure 15. 3rd Quadrant Characteristic at 175 °C

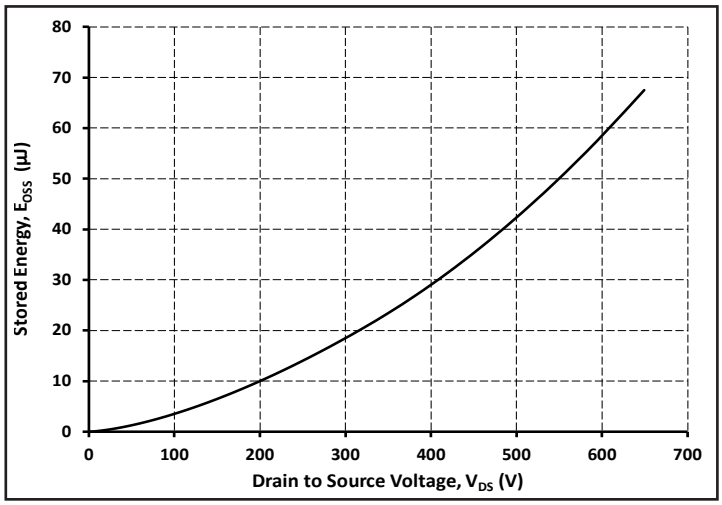

Figure 16. Output Capacitor Stored Energy

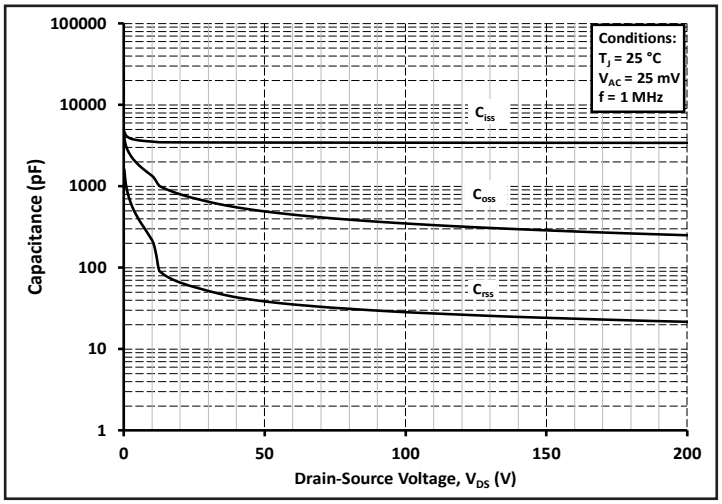

Figure 17. Capacitances vs. Drain-Source Voltage (0 - 200V)

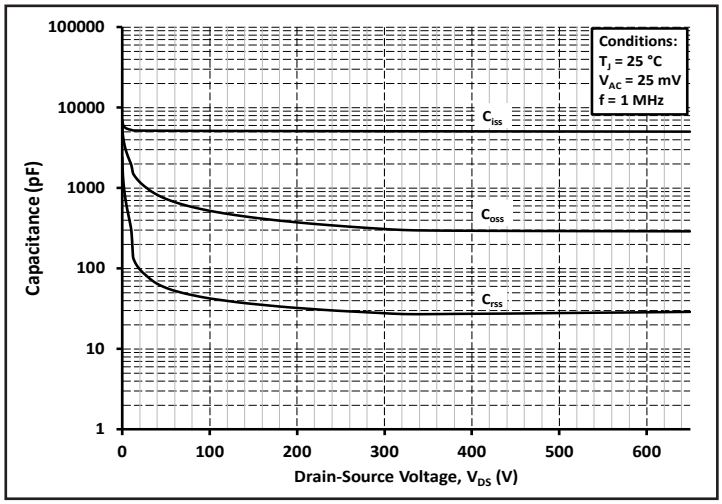

Figure 18. Capacitances vs. Drain-Source Voltage (0 - 650V)

Copyright © 2022 Wuxi Gwok Semiconductor Co.,Ltd All rights reserved.

Typical Performance

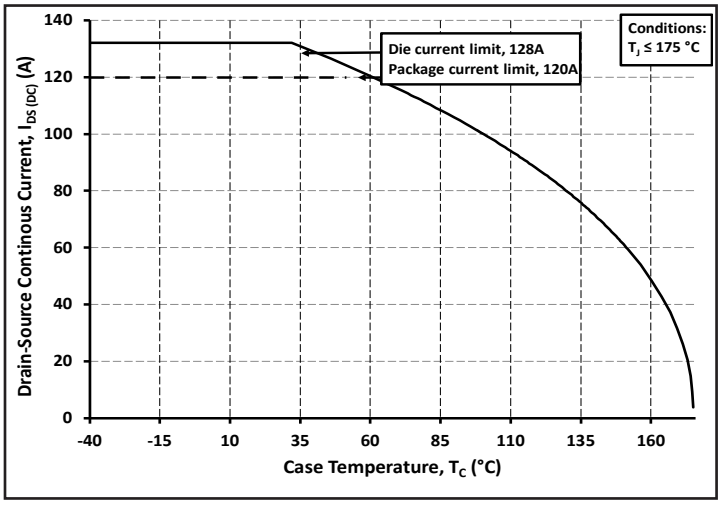

Figure 19. Continuous Drain Current Derating vs. Case Temperature

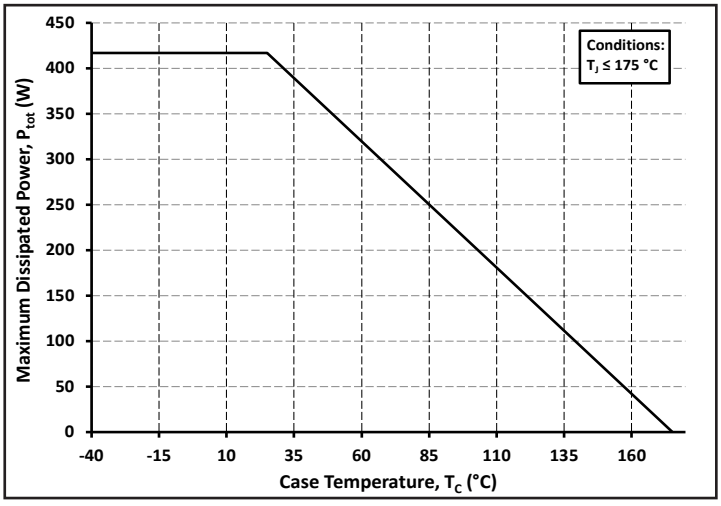

Figure 20. Maximum Power Dissipation Derating vs. Case Temperature

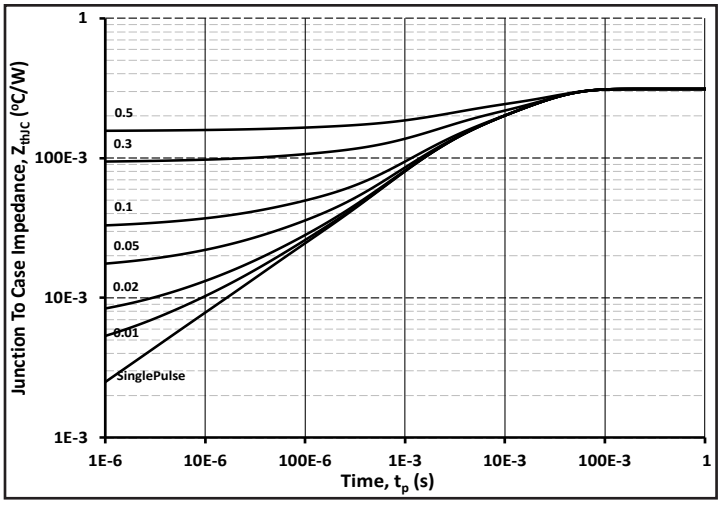

Figure 21. Transient Thermal Impedance (Junction - Case)

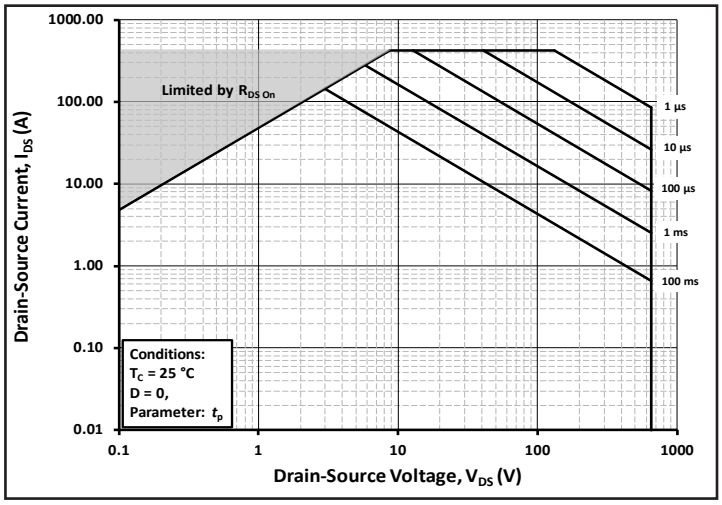

Figure 22. Safe Operating Area

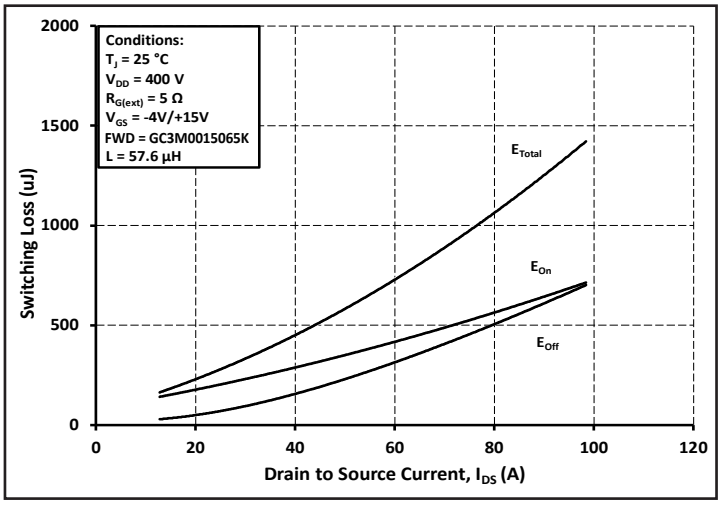

Figure 23. Clamped Inductive Switching Energy vs. Drain Current (V_{DD} = 400V)

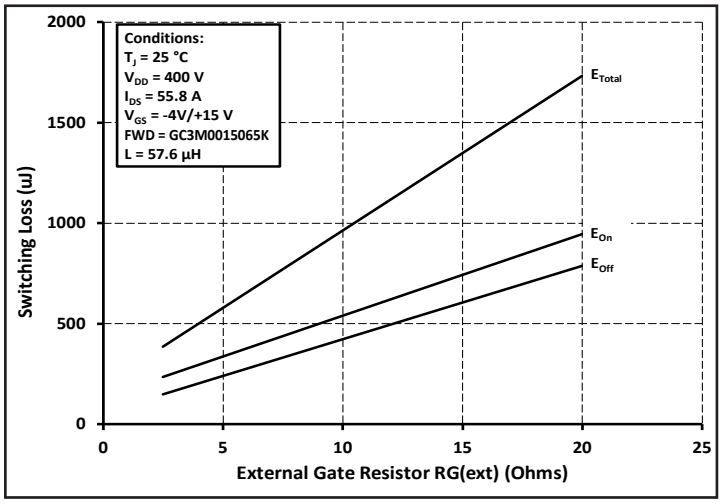

Figure 24. Clamped Inductive Switching Energy vs. $R_{G(ext)}$

Copyright © 2022 Wuxi Gwok Semiconductor Co.,Ltd All rights reserved.

Typical Performance

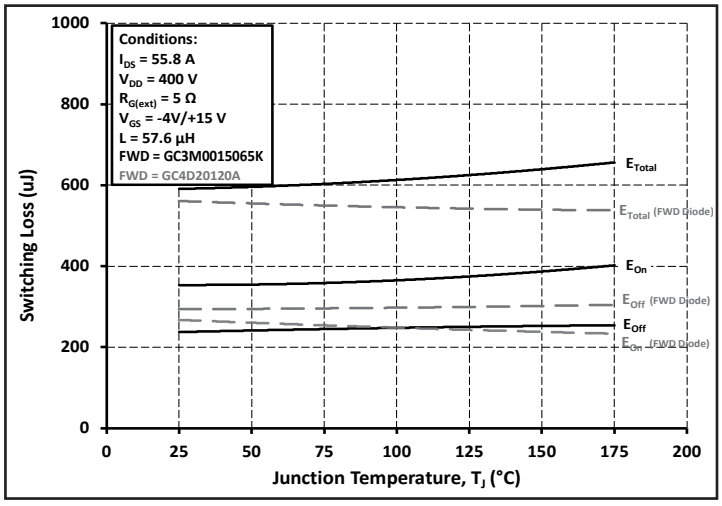

Figure 25. Clamped Inductive Switching Energy vs. Temperature

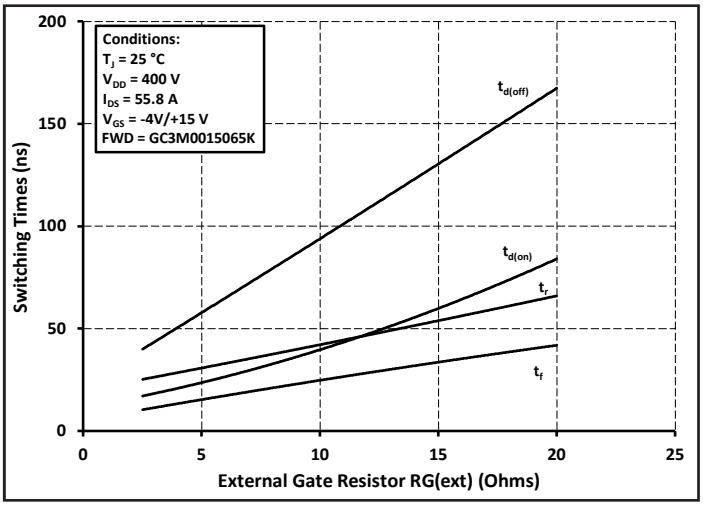

Figure 26. Switching Times vs. $R_{G(ext)}$

Copyright © 2022 Wuxi Gwok Semiconductor Co.,Ltd All rights reserved.

Test Circuit Schematic

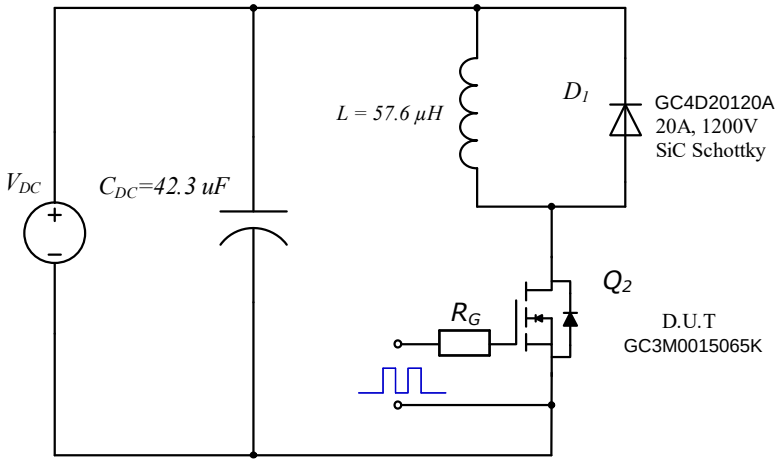

Figure 27. Clamped Inductive Switching Waveform Test Circuit

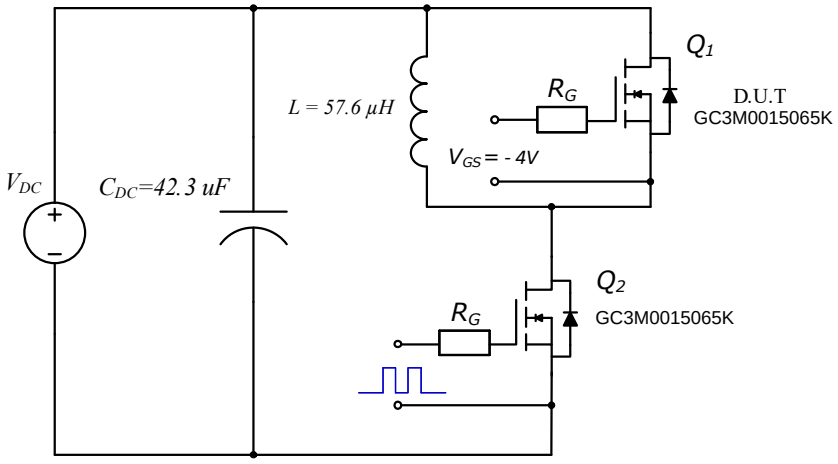

Figure 28. Body Diode Recovery Test Circuit

Copyright © 2022 Wuxi Gwok Semiconductor Co.,Ltd All rights reserved.

Package Dimensions

TO-247-4L

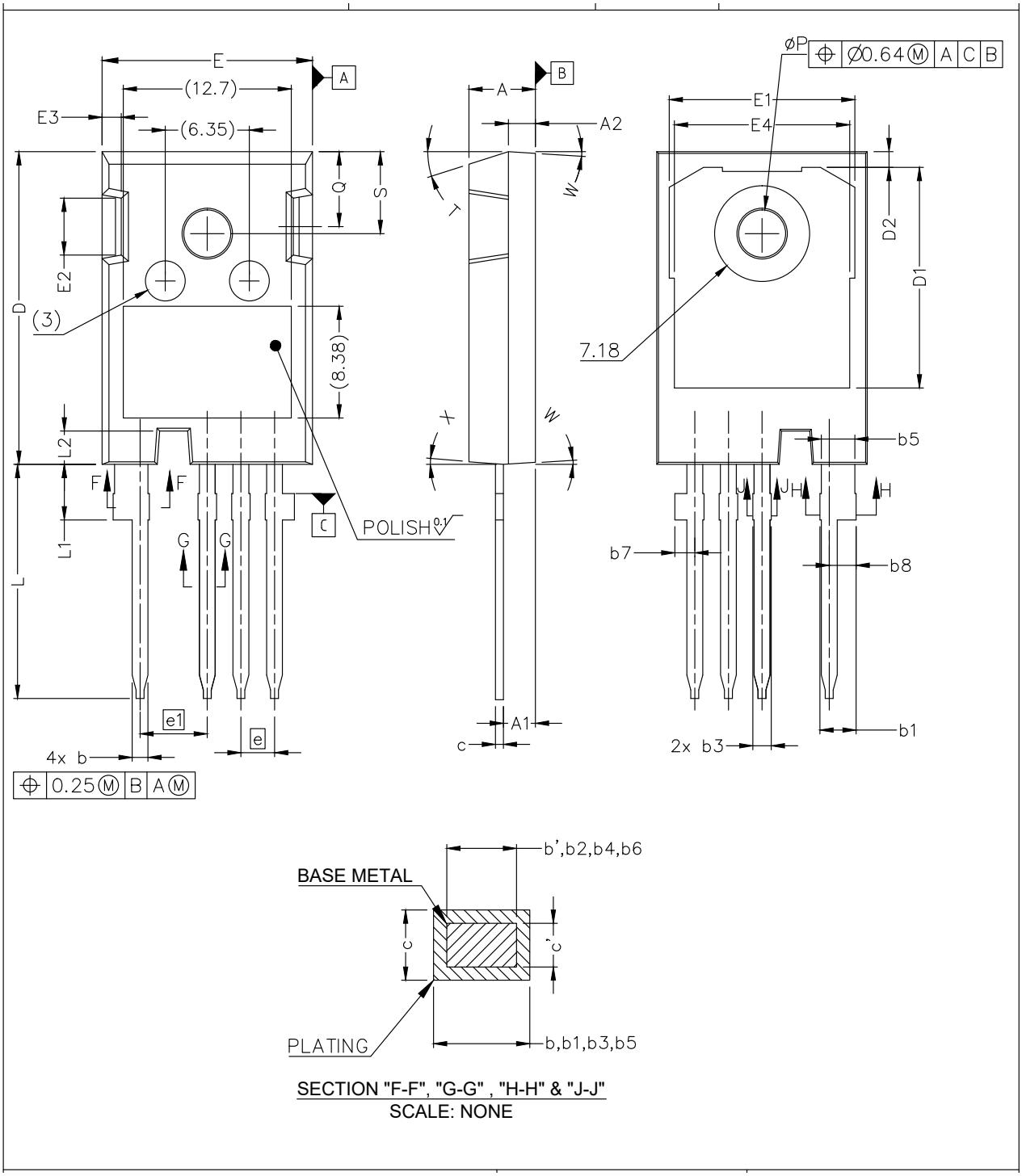

Copyright © 2022 Wuxi Gwok Semiconductor Co.,Ltd All rights reserved.

Package Dimensions

TO-247-4L

SYM	MILLIMETERS	
	MIN	MAX
A	4.83	5.21
A1	2.29	2.54
A2	1.91	2.16
b'	1.07	1.28
b	1.07	1.33
b1	2.39	2.94
b2	2.39	2.84
b3	1.07	1.60
b4	1.07	1.50
b5	2.39	2.69
b6	2.39	2.64
b7	1.30	1.70
b8	1.80	2.20

c'	0.55	0.65
c	0.55	0.68
D	23.30	23.60
D1	16.25	17.65
D2	0.95	1.25
E	15.75	16.13
E1	13.10	14.15
E2	3.68	5.10
E3	1.00	1.90
E4	12.38	13.43
e	2.54 BSC	
e1	5.08 BSC	
N*	4	
L	17.31	17.82
L1	3.97	4.37
L2	2.35	2.65
øP	3.51	3.65
Q	5.49	6.00
S	6.04	6.30
T	17.5° REF.	
W	3.5 ° REF.	
X	4° REF.	

Recommended Solder Pad Layout

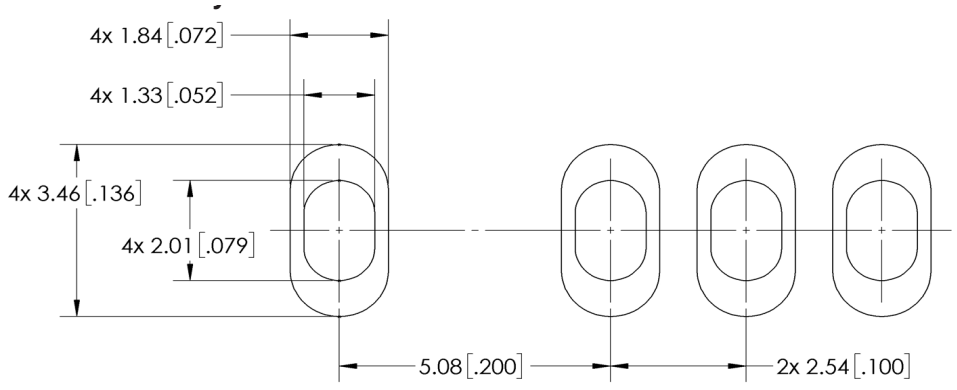

Copyright © 2022 Wuxi Gwok Semiconductor Co.,Ltd All rights reserved.