This document contains proprietary information and such informationmay not be disclosed to others for any purposes,
not used for sales/marketing/procurement purposes without written permission

| REV | DESCRIPTION OF REVISION | ECN NO. | BY | DATE | APPROVED |
|---|---|---|---|---|---|
| A | Initial Release | ——— | H. wei | 12/7/13 | 12/7/13 |

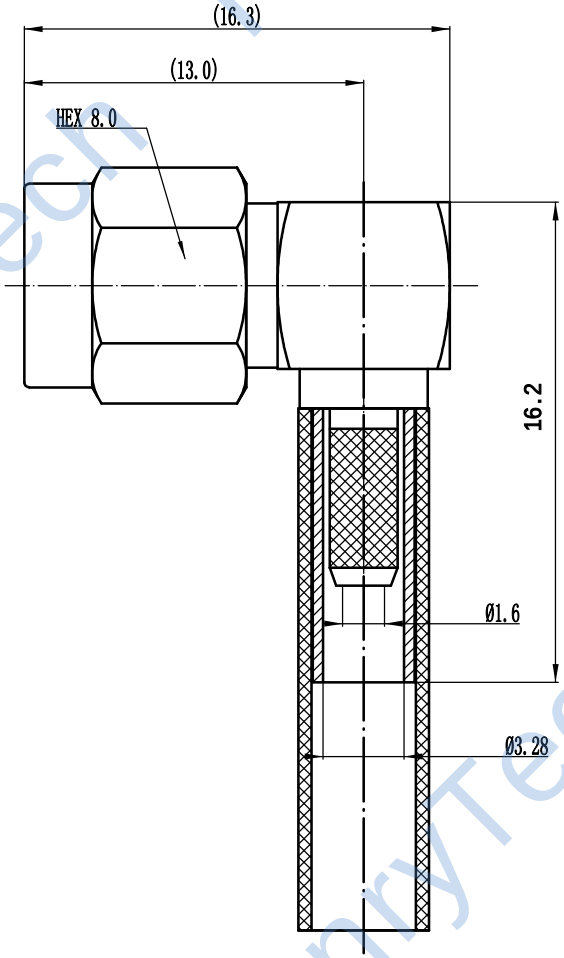


1 Electrical

| | |
|---|---|
| 1.1 Impedence | 50Ω |
| 1.2 Dielectric withstanding voltage | 1000V(volts RMS) |
| 1.3 Center contact resistance | ≤ 3MΩ |
| 1.4 Outer contact resistance | ≤ 2MΩ |
| 1.5 Insulation resistance: | ≥5000MΩ |
| 1.6 Frequency | 0~3Ghz |

2 Environmental&Mechanical

| | |
|---|---|
| 2.1 Temperature range | -45℃~125℃ |
| 2.2 RoHs Compliant | |
| 2.3 Durability | >500 cycles |

3 Materials&plating

| | |
|---|---|
| 3.1 Body: | Brass, Gold Plated |
| 3.2 Insulator: | Teflon |
| 3,3 Contact Pin: | Brass,, Gold Plated |
| 3.4 Washer: | Phosphor, Gold Plated |
| 3.5 Hex Nut: | Brass, Gold Plated |

Notes:

1. ALL SPECIFICATIONS ARE SUBJECT TO CHANGE NOTICE AT ANY TIME
2. CUSTOMER OUTLINE DRAWING FOR REFERENCE ONLY

| | | | |
|---|---|---|---|
| DRAWN: H. wei 12/07/13 | TITLE: RF Coaxial Connector SMA Male R/A Conn. For RG316 | HenryTech | |
| ENGINEER: L. yu 12/07/13 | | DIMENSION IN MILLIMETERS (mm) | |
| APPROVED: W. yi 12/07/13 | | | |
| TOLERANCES UNLESS OTHERWISE SPECIFIED: X ±0.50, .X ±0.20, .XX ±0.10, ANGLES ±1° | PART NO: HL-SMA-JW3F | SIZE: A4 / SCALE: N/A / SHEET: 1/1 / REV: A | |

HenryTech