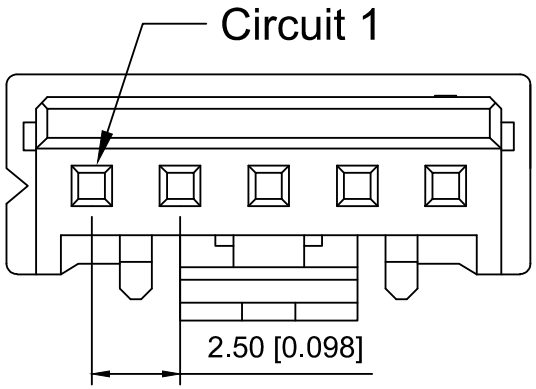

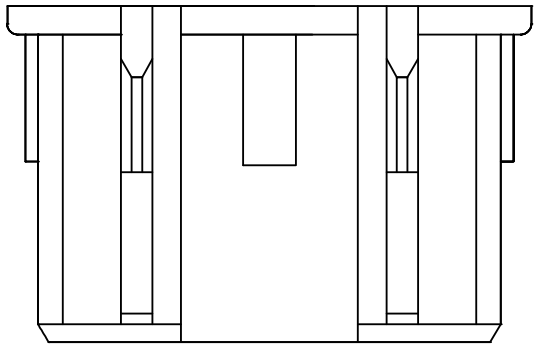

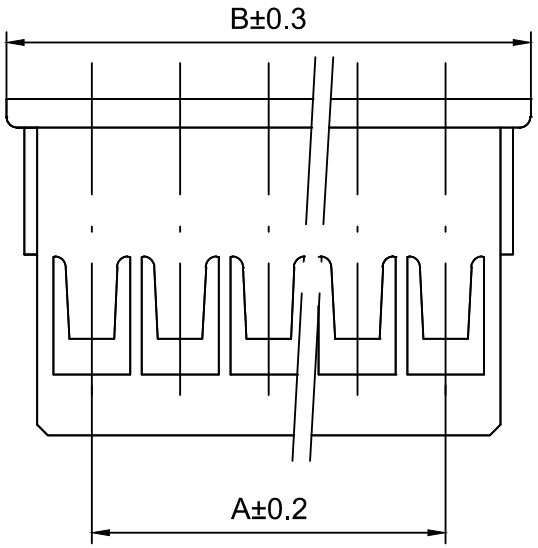

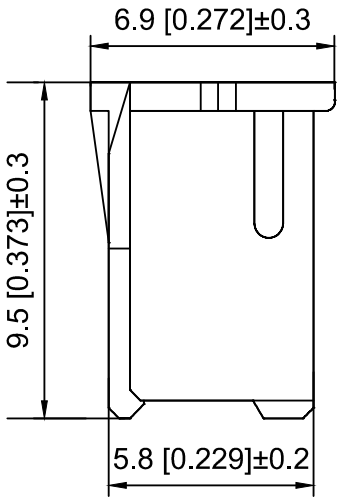

Specifications:
规格：
Voltage rating:250V AC/DC
额定电压：250V AC/DC
Current rating:3A AC/DC
额定电流：3A AC/DC
Withstanding voltage:1000V AC/minute
耐受电压：1000V AC/分钟
Temperature range:-25℃-+85℃
温度范围：-25℃-+85℃
Insulation resistance:1000MΩ min
绝缘电阻：1000MΩ Min
Contact resistance:20mΩ Max
接触电阻：20mΩ Max

X2508 H - 07 - N0
① ② ③ ④

1.Series No
2.Category:H-HSG
3.Row No.Pin No:XX-02~20P
4.Material:N0-Nylon 94V-0 White

Poles	Dimensions(mm)	
	A	B
02	2.50	7.30
03	5.00	9.80
04	7.50	12.30
05	10.00	14.80
06	12.50	17.30
07	15.00	19.80
08	17.50	22.30
09	20.00	24.80
10	22.50	27.30
11	25.00	29.80
12	27.50	32.30
20	47.50	52.30

X2508H-07-N0	Nylon	X2508W	X2508T
PART N0	Material	Suitable XKB Wafer	Suitable XKB Terminal

MARK	DESCRIPTION	DATE	REVISED	APPROVED
ΔX				
ΔX				
ΔX				

REVISIONS

ANGLAR	±5°
L≤ 4	±0.2
4<L≤ 16	±0.3
16<L≤ 63	±0.4
L> 63	±0.5

UNSPECIFIED TOLERANCES

www.helloxkb.com www.helloxkb.cn www.xk-dg.cn

XKB INDUSTRIAL PRECISION CO.,LIMITED

DSND		SCALE: N/A	MODEL TYPE: 2.5mm Crimp Style Connector
DWN		VIEW:	PART NO.: X2508H-07-N0
CHKD		UNIT: mm/in	DWG NO.: X-X2508H-07-N0
APPD		SIZE: A4	

WEIGHT	SHEET	REVISION
	1/1	A0