REVISIONS					
REV.	ECN NO.	LOCATION	DESCRIPTION	DATE	DESIGN
A1	N/A		图面升级整理图面	2024.9.13	阿树
A2	ECN-P-2025112804	A2 X2	产品外观及尺寸变更	2025.11.28	阿树

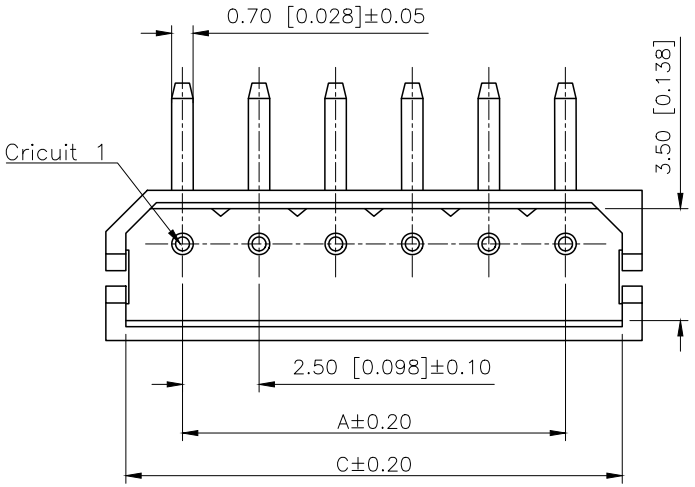

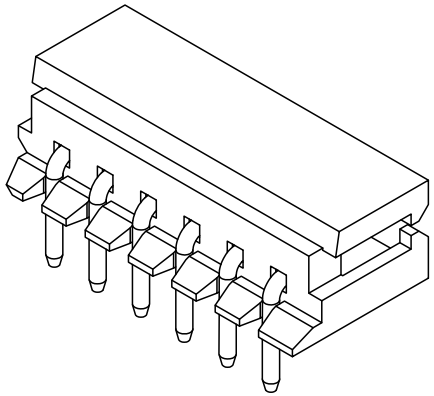

■SPECIFICATIONS
- Voltage rating:250V AC/DC
- Current rating:3A AC/DC
- Withstanding Voltage:1000V AC/minute
- Temperature range:-40°C~+125°C
- Insulation resistance:≥1000MΩ
- Contact resistance:≤10mΩ
- After environmental testing:≤20mΩ

PART NO.:

X2564 W R-04-N0 SN
① ② ③ ④ ⑤ ⑥

①Series No
②Category:W-Wafer
③Welding Board Angle:R-Stright 90°
④Row No.Pin No:XX-02~16Pin
⑤Material: N0-PA66 UL94V-0
⑥Planting:SN-Tin Plated

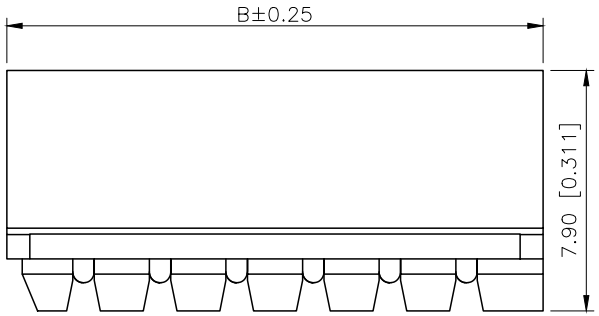

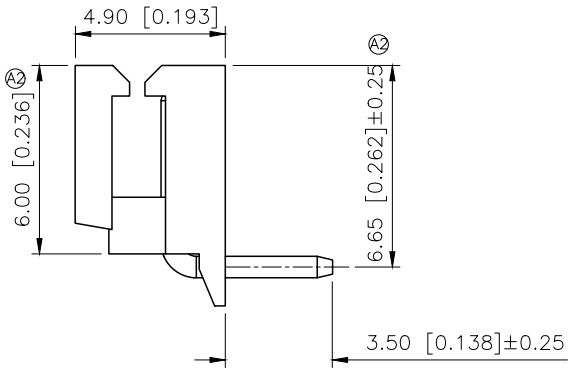

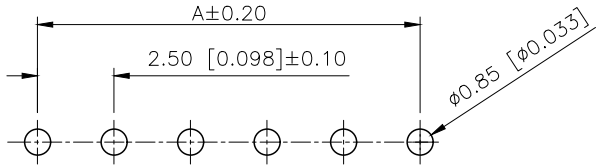

PCB LAYOUT

POLES	A	B	C	POLES	A	B	C
2	2.50	7.50	6.20	10	22.50	27.50	26.20
3	5.00	10.00	8.70	11	25.00	30.00	28.70
4	7.50	12.50	11.20	12	27.50	32.50	31.20
5	10.00	15.00	13.70	13	30.00	35.00	33.70
6	12.50	17.50	16.20	14	32.50	37.50	36.20
7	15.00	20.00	18.70	15	35.00	40.00	38.70
8	17.50	22.50	21.20	16	37.50	42.50	41.20
9	20.00	25.00	23.70				

PART NO	Material	Material(pin)	Finish(pin)	Suitable XKB Terminal
X2564WR-04-N0SN	Nylon 66 UL 94V-0	Brass	Tin-Plated	X2564W

AuGLAR	±5°
X.	±0.40
X.x	±0.30
X.xx	±0.20
X.xxx	±0.15
UNSPECIFIED TOLERAuCES	

XKB 星创 Connection

DESIGN	阿树	VIEW:	MODEL TYPE: 2.50mm Crimp Style Connectors
CHECKED		UNIT: mm/in	PART NO.: X2564WR-04-N0SN
APPROVED		SIZE: A4	DWG NO.: X-X2564WR-04-N0SN

XKB INDUSTRIAL PRECISION CO.,LIMITED

SCALE	PAGE	REVISION
N/A	1/1	A2