MX5 SERIES AUTOMOTIVE CONNECTORS

040/070 Crimp Contacts, PCB-to-Cable Applications

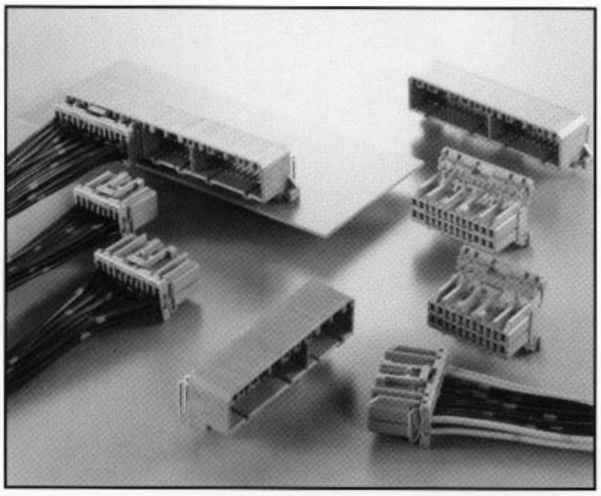

FEATURES

- Designed for state-of-the-art interconnections for automotive electronic equipment.
- Designed for high density packaging with numerous contacts in an engine control unit.
- Signal contacts (4 Amps) and power contacts (8 Amps) are housed in the same connector.
- Several wire-terminated sockets are coupled with a pin header mounted on a board.
- Mechanical lock assures positive mating.
- Double locking mechanism avoids contact dislodging.
- Highly reliable socket contacts.
- Simplified crimp type termination.

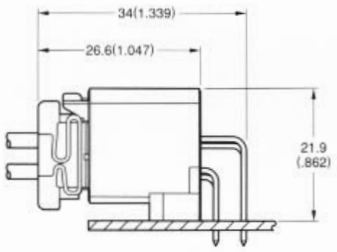

GENERAL SPECIFICATIONS

Number of Contacts	Pin: 34, 42, 48, 54, 64, 76 Socket: 12, 16, 22, 26
Contact Spacing	Signal: 3.0mm (.118") Power: 3.5mm (.138")
Current Rating	Signal: 4 Amps, Power: 8 Amps
Dielectric Withstanding Voltage	1000 VAC r.m.s. (for one minute)
Insulation Resistance	100 megohms min.
Contact Resistance	5 milliohms max.
Applicable PCB Thickness	1.6mm (.063")
Operating Temperature	-40°C to +85°C

APPLICABLE WIRE (Stranded)

Contact Type	Signal	Power
Wire Type (JIS)	AVS, AVSS, AVX	
AWG No.	#24 to #18	#22 to #16, #14 (AVSS)
Conductor Cross Section Area	0.2 to 0.85mm^2	0.3 to 2mm^2 (Note)
Insulation Outer Dia.	1.2 to 2.2mm (.047 to .087")	1.4 to 2.9mm (.055 to .114")

Note: 2mm^2 for AVSS only.

MATERIALS AND FINISHES

Description	Materials/Finishes
Insulator	Glass-filled PBT (Green or light blue for 34 contacts only, note 2)
Socket Housing	PBT (Green, note 2)
Contact (note 1)	Pin: Brass, Socket: Phosphor Bronze Finishes: Tin plating or Gold (connecting area) with Solder (terminal area) plating over nickel

Note 1: For pin contacts, tin plating is standard finish. Gold plated contacts can be supplied with standard contacts in the same connector. Please consult JAE for details.

Note 2: The standard color of insulator and socket housings is green. Other colors are available. For details, please consult JAE.

Dimensions and specifications subject to change without notice.

	Hong Kong	Japan	Korea	Philippines	Singapore	Taiwan	Europe	United States
Tel:	2723-7782	03-3780-2715	2-551-8959	46-433-0276	748-1332	02-555-9711	1276-21717	949-753-2600
Fax:	2723-9028	03-3780-2883	2-551-8958	46-433-0287	748-2920	02-556-5424	1276-66165	949-753-2699

RIGHT ANGLE PIN HEADER
34 Contacts (Signal/28 Positions, Power/6 Positions)

Part Number	Mating Connector		
	Part Number	Contact Position Signal	Power
MX5-34P-L-P*S*-LB (**: Gold plated contacts– See page x)	MX5-12S-C-G	12	—
	MX5-22S-C-G	16	6

Note 1: An example of the Part No. shown above is for a loose item. Connectors are supplied in stick carriers. Consult JAE for ordering details.

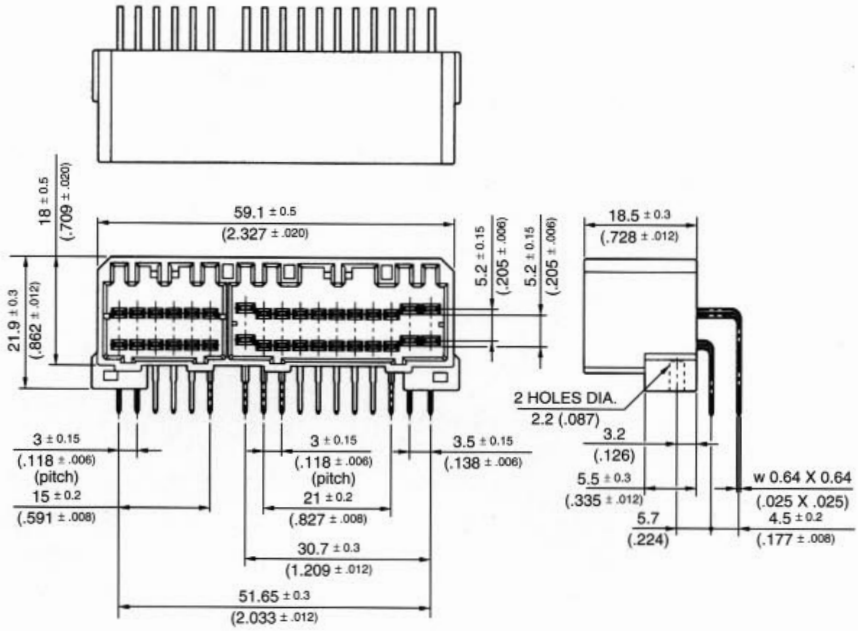

PCB Hole Pattern (Ref.)

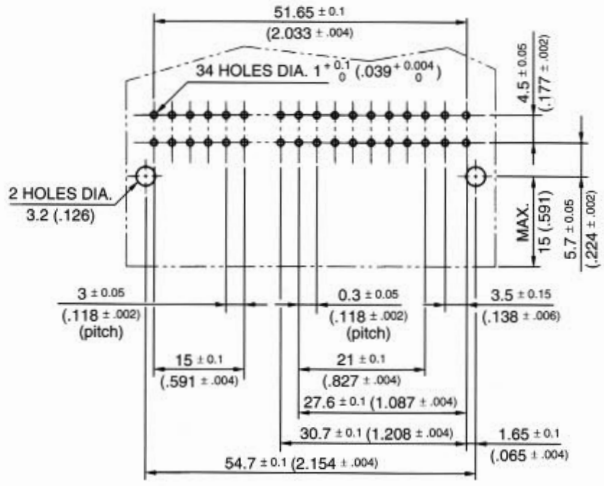

Note: Suggested screws:
M3 x 6 tapping screws (2 or 4 grades) per JIS B 1115, 1122 or 1123

Dimensions in mm (inches).

Hong Kong	Japan	Korea	Philippines	Singapore	Taiwan	Europe	United States
Tel: 2723-7782	03-3780-2715	2-551-8959	46-433-0276	748-1332	02-555-9711	1276-21717	949-753-2600
Fax: 2723-9028	03-3780-2883	2-551-8958	46-433-0287	748-2920	02-556-5424	1276-66165	949-753-2699

MX5 SERIES AUTOMOTIVE CONNECTORS

040/070 Crimp Contacts, PCB-to-Cable Applications

RIGHT ANGLE PIN HEADER
42 Contacts (Signal/32 Positions, Power/10 Positions)

Part Number	Mating Connector		
	Part Number	Contact Position Signal	Power
MX5-42P-L-P*S*-G (**: Gold plated contacts– See below)	MX5-16S-C-G	16	—
	MX5-26S-C-G	16	10

Note 1: An example of Part No. shown above is for a loose item. Connectors are supplied in stick carriers. Consult JAE for ordering details.

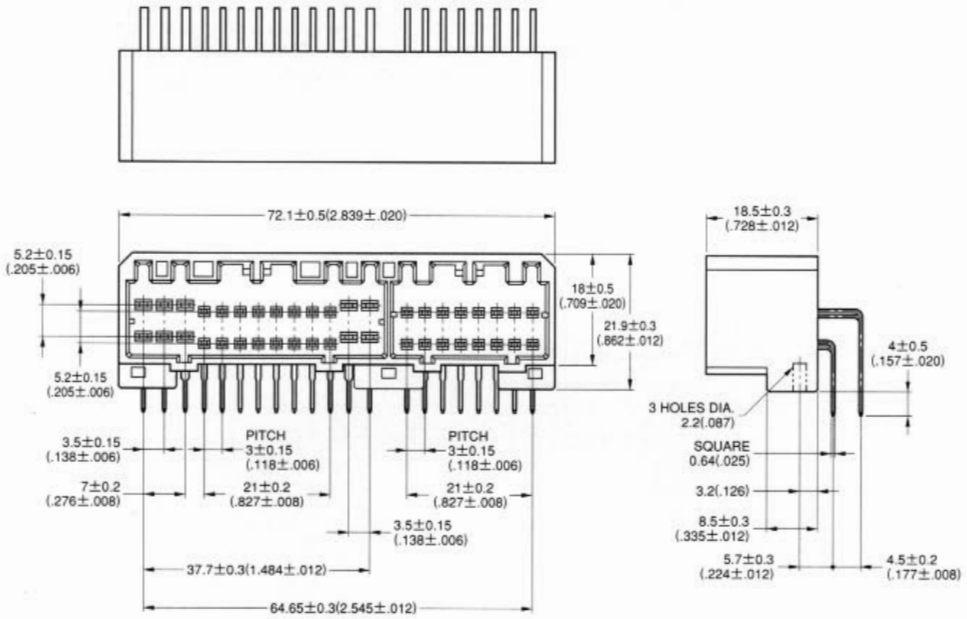

PCB Hole Pattern (Ref.)

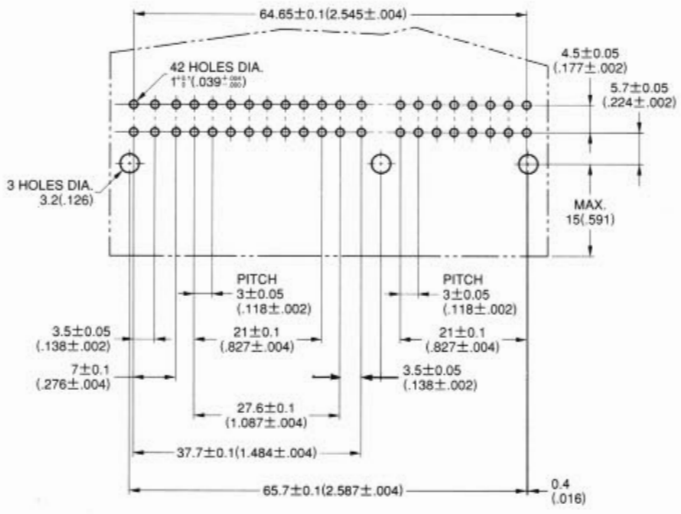

Note: Suggested screws:
M3 x 6 tapping screws (2 or 4 grades)
per JIS B 1115, 1122 or 1123

**** Example of Part No. with Gold Plated Contacts**

Part Number: MX5-42P-L-P1 S16-G
① ②

Contents (■ mark positions)
① Power contacts/1 position: P1
② Signal contacts/16 positions: S16

Finishes of ■ mark positions:
Gold (connecting area) with solder
(SnPb • terminal area) plating over nickel.
Other positions: Tin plating

Front-Face View

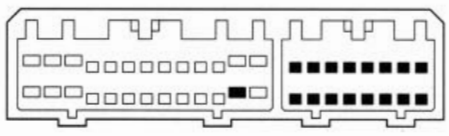

Dimensions in mm (inches).

	Hong Kong	Japan	Korea	Philippines	Singapore	Taiwan	Europe	United States
Tel:	2723-7782	03-3780-2715	2-551-8959	46-433-0276	748-1332	02-555-9711	1276-21717	949-753-2600
Fax:	2723-9028	03-3780-2883	2-551-8958	46-433-0287	748-2920	02-556-5424	1276-66165	949-753-2699

RIGHT ANGLE PIN HEADER
48 Contacts (Signal/32 Positions, Power/16 Positions)

Part Number	Mating Connector		
	Part Number	Contact Position Signal	Power
MX5-48P-L-P*S*-G (**: Gold plated contacts– See page 144)	MX5-22S-C-G	16	6
	MX5-26S-C-G	16	10

Note 1: An example of Part No. shown above is for a loose item. Connectors are supplied in stick carriers. Consult JAE for ordering details.

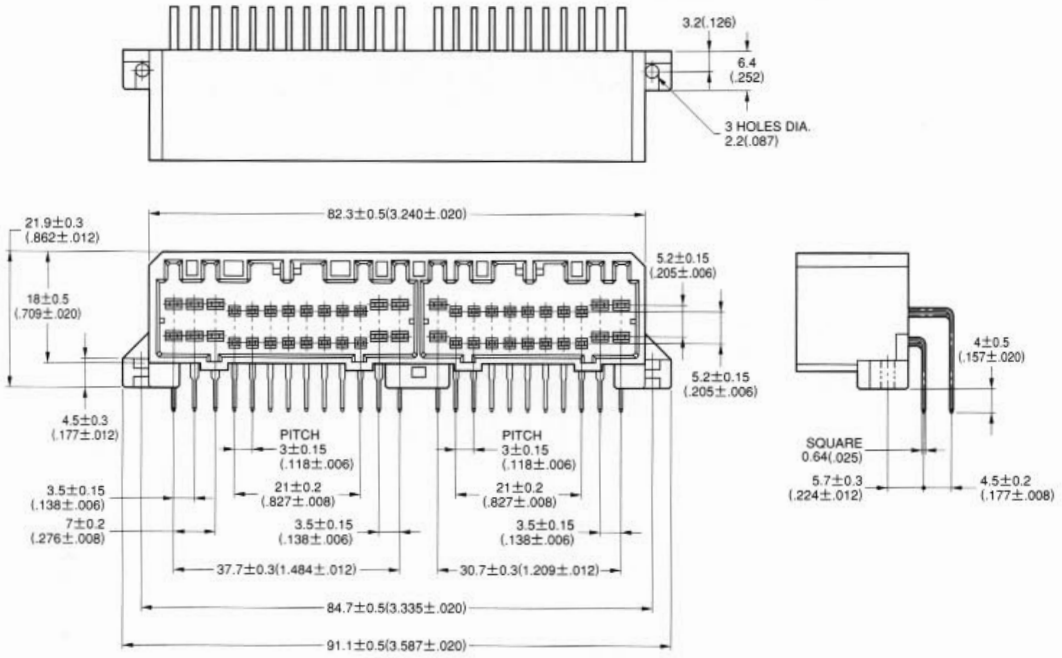

PCB Hole Pattern (Ref.)

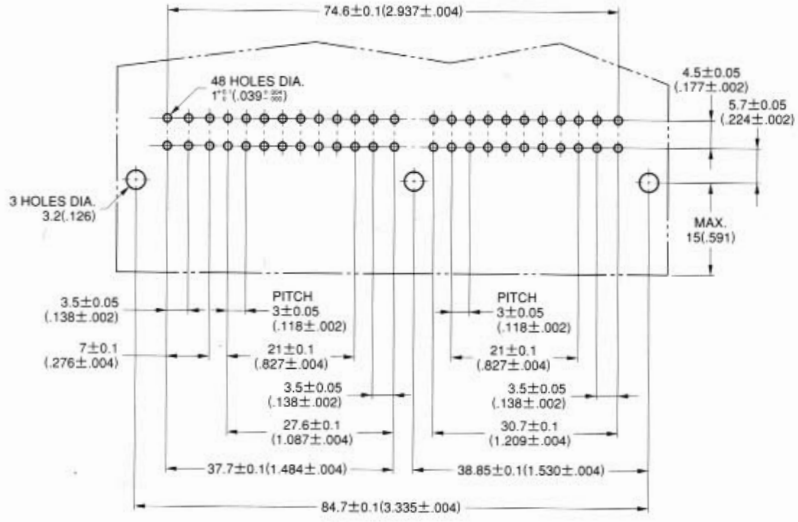

Note: Suggested screws:
M3 x 6 tapping screws (2 or 4 grades)
per JIS B 1115, 1122 or 1123

Dimensions in mm (inches).

RIGHT ANGLE PIN HEADER
54 Contacts (Signal/32 Positions, Power/22 Positions)

Part Number	Mating Connector		
	Part Number	Contact Position Signal	Power
MX5-54P-L-P*S*-G	MX5-12SA-C-G	—	12
(**: Gold plated contacts– See page 144)	MX5-16S-C-G	16	—
	MX5-26S-C-G	16	10

Note 1: An example of Part No. shown above is for a loose item. Connectors are supplied in stick carriers. Consult JAE for ordering details.

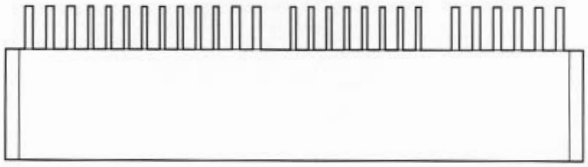

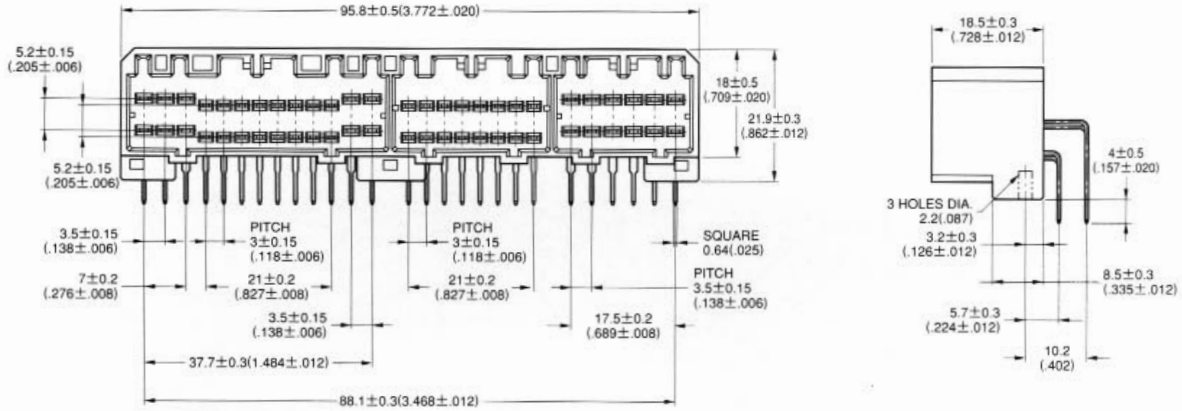

PCB Hole Pattern (Ref.)

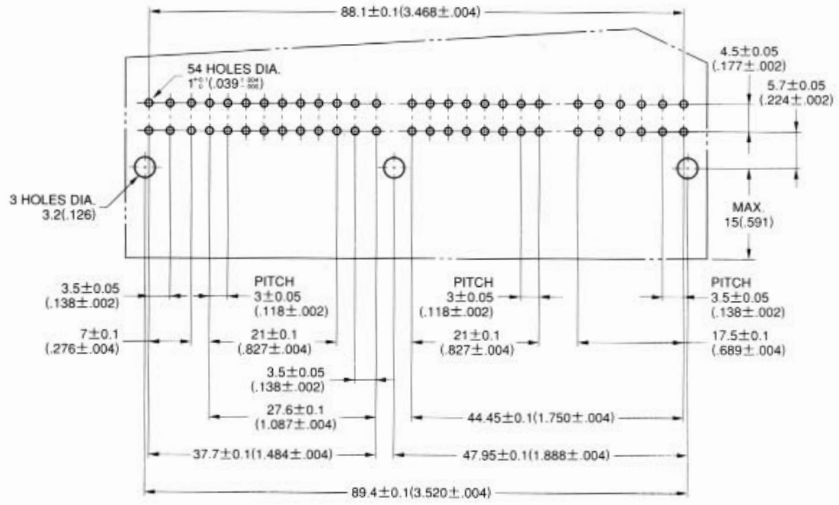

Note: Suggested screws:
M3 x 6 tapping screws (2 or 4 grades) per JIS B 1115, 1122 or 1123

Dimensions in mm (inches).

MX5 SERIES AUTOMOTIVE CONNECTORS

040/070 Crimp Contacts, PCB-to-Cable Applications

RIGHT ANGLE PIN HEADER
64 Contacts (Signal/48 Positions, Power/16 Positions)

Part Number	Mating Connector		
	Part Number	Contact Position Signal	Power
MX5-64P-L-P*S*-G	MX5-16S-C-G	16	—
(**: Gold plated contacts– See page 144)	MX5-22S-C-G	16	6
	MX5-26S-C-G	16	10

Note 1: An example of Part No. shown above is for a loose item. Connectors are supplied in stick carriers. Consult JAE for ordering details.

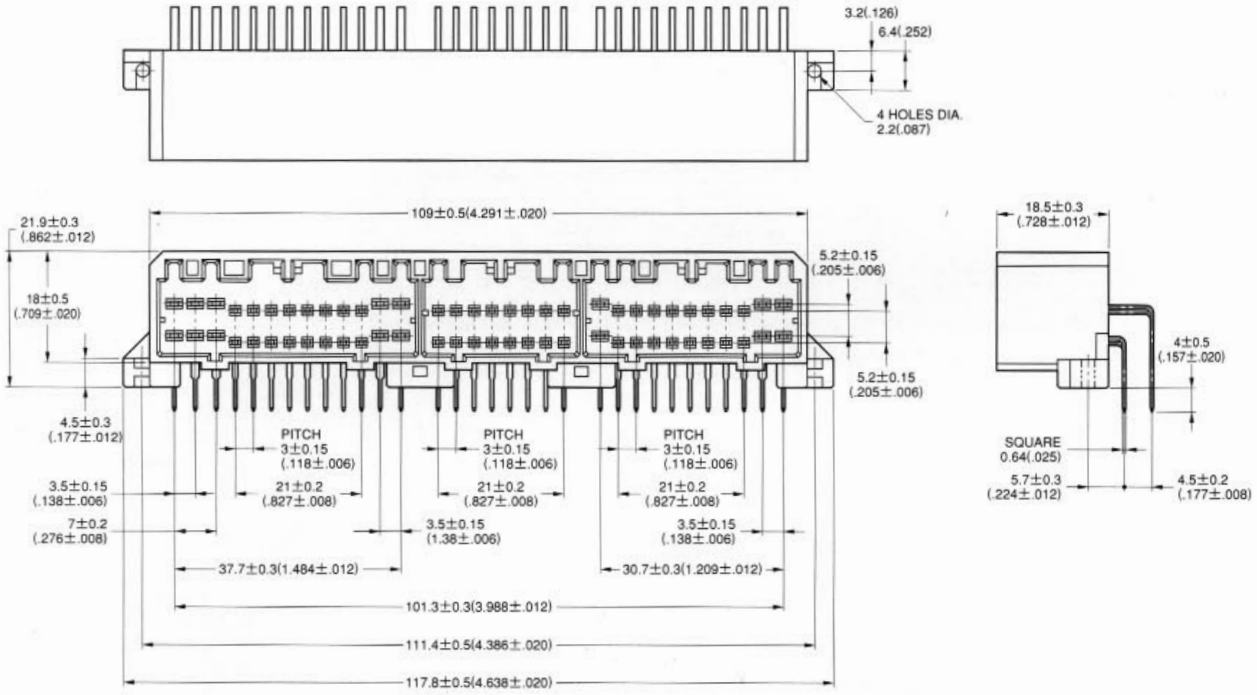

PCB Hole Pattern (Ref.)

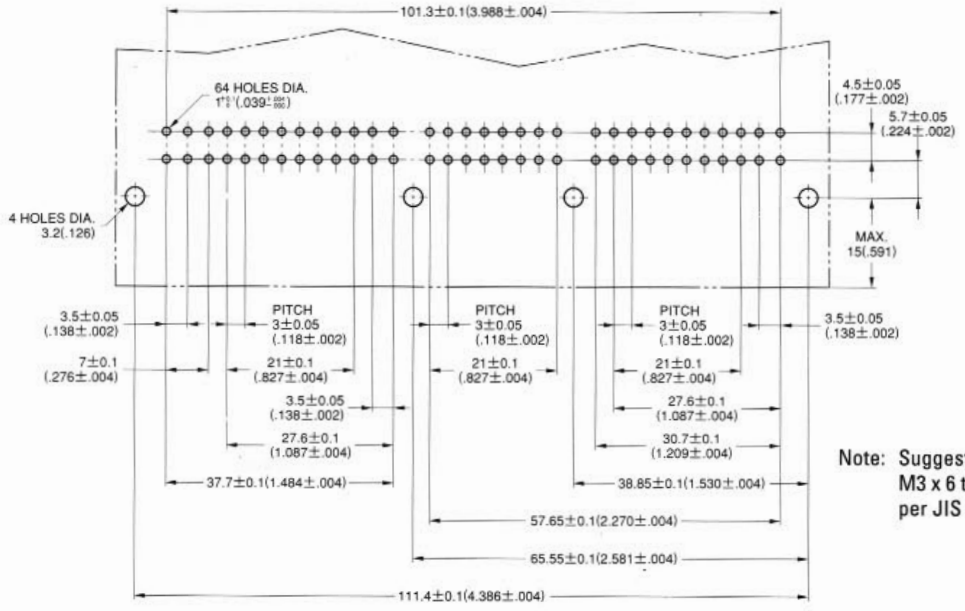

Note: Suggested screws:
M3 x 6 tapping screws (2 or 4 grades) per JIS B 1115, 1122 or 1123

Dimensions in mm (inches).

	Hong Kong	Japan	Korea	Philippines	Singapore	Taiwan	Europe	United States
Tel:	2723-7782	03-3780-2715	2-551-8959	46-433-0276	748-1332	02-555-9711	1276-21717	949-753-2600
Fax:	2723-9028	03-3780-2883	2-551-8958	46-433-0287	748-2920	02-556-5424	1276-66165	949-753-2699

RIGHT ANGLE PIN HEADER

76 Contacts (Signal/60 Positions, Power/16 Positions)

Part Number	Mating Connector		
	Part Number	Contact Position Signal	Power
MX5-76P-L-01-P*S*-G	MX5-12S-C-G	12	—
(**: Gold plated contacts– See page 144)	MX5-16S-C-G	16	—
	MX5-22S-C-G	16	6
	MX5-26S-C-G	16	10

Note 1: An example of Part No. shown above is for a loose item. Connectors are supplied in stick carriers. Consult JAE for ordering details.

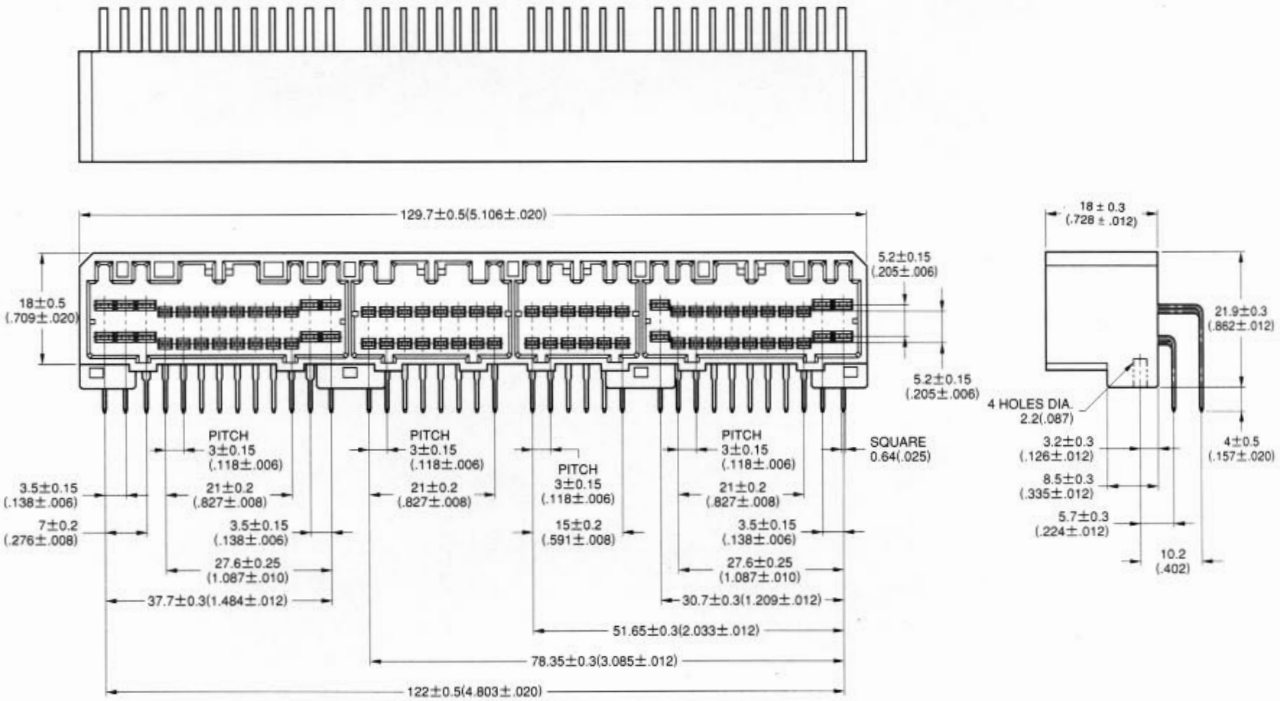

PCB Hole Pattern (Ref.)

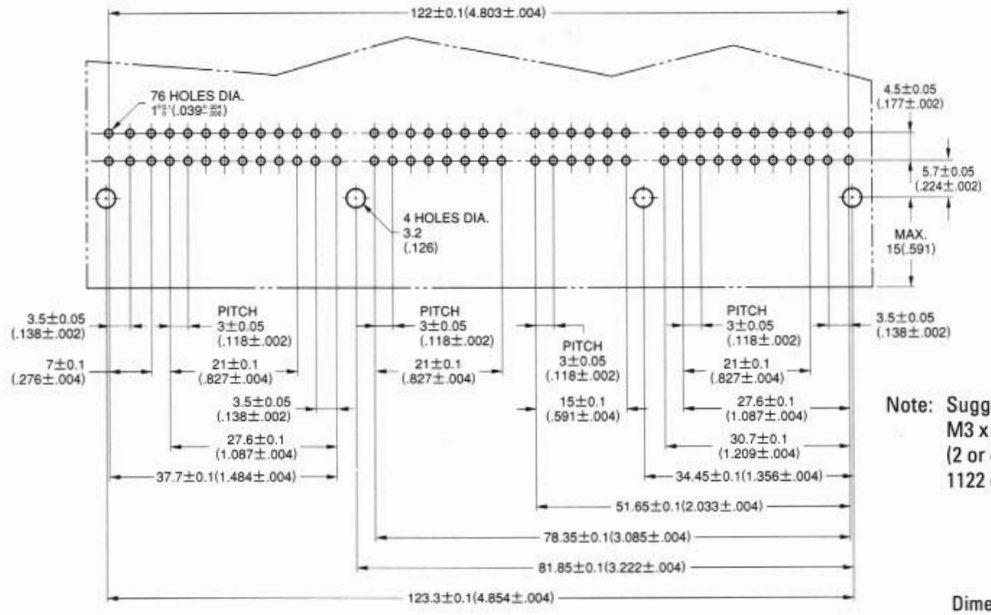

Note: Suggested screws: M3 x 6 tapping screws (2 or 4 grades) per JIS B 1115, 1122 or 1123

Dimensions in mm (inches).

MX5 SERIES AUTOMOTIVE CONNECTORS

040/070 Crimp Contacts, PCB-to-Cable Applications

SOCKET HOUSING

No. of Contacts	Part Number	Contact Position Signal	Power
12	MX5-12S-C-G	12	—
12	MX5-12SA-C-G	—	12
16	MX5-16S-C-G	16	—

• 12 Contacts

Signal Type

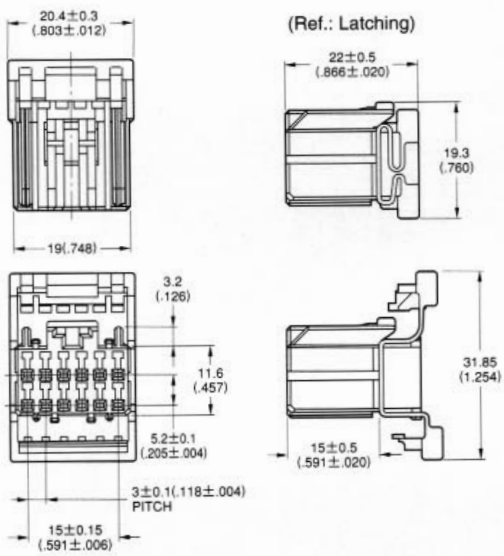

Power Type

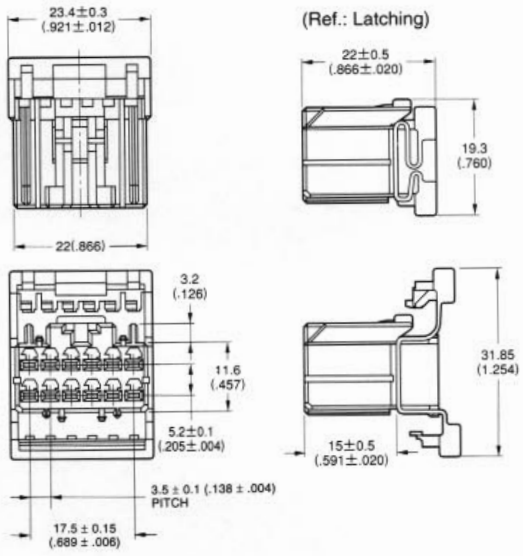

• 16 Contacts

Signal Type

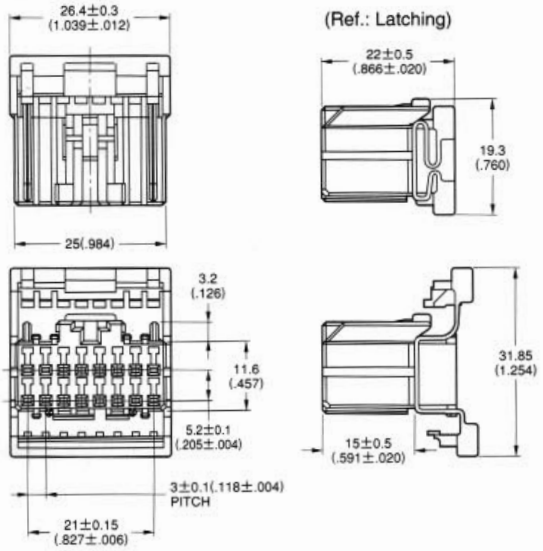

Dimensions in mm (inches).

	Hong Kong	Japan	Korea	Philippines	Singapore	Taiwan	Europe	United States
Tel:	2723-7782	03-3780-2715	2-551-8959	46-433-0276	748-1332	02-555-9711	1276-21717	949-753-2600
Fax:	2723-9028	03-3780-2883	2-551-8958	46-433-0287	748-2920	02-556-5424	1276-66165	949-753-2699

MX5 SERIES AUTOMOTIVE CONNECTORS

040/070 Crimp Contacts, PCB-to-Cable Applications

SOCKET HOUSING

No. of Contacts	Part Number	Contact Position Signal	Power
22	MX5-22S-C-G	16	6
26	MX5-26S-C-G	16	10

• 22 Contacts

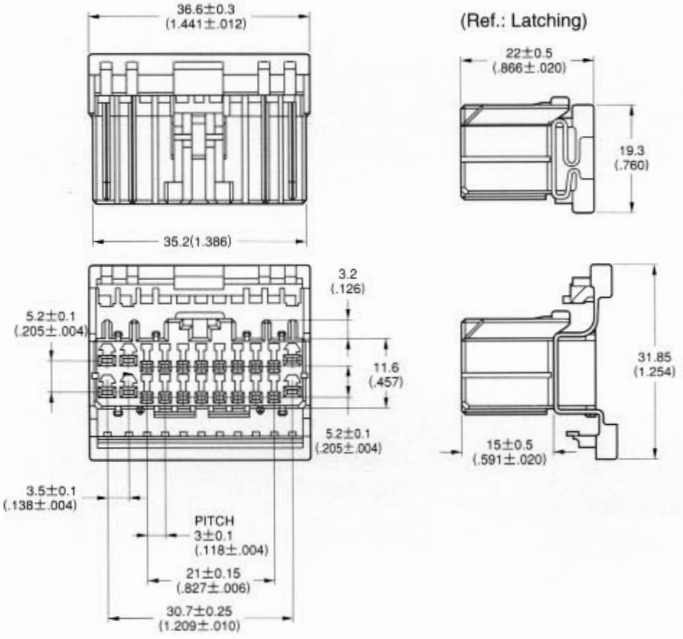

• 26 Contacts

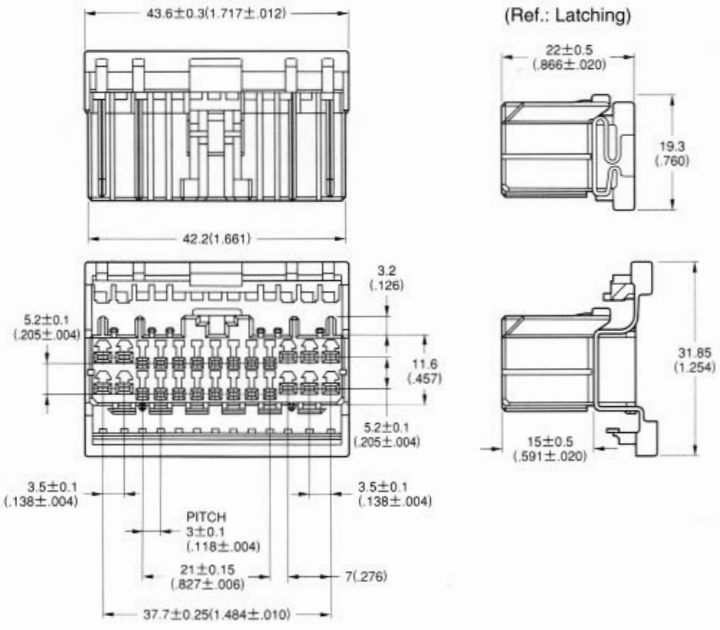

Dimensions in mm (inches).

	Hong Kong	Japan	Korea	Philippines	Singapore	Taiwan	Europe	United States
Tel:	2723-7782	03-3780-2715	2-551-8959	46-433-0276	748-1332	02-555-9711	1276-21717	949-753-2600
Fax:	2723-9028	03-3780-2883	2-551-8958	46-433-0287	748-2920	02-556-5424	1276-66165	949-753-2699

MX5 SERIES AUTOMOTIVE CONNECTORS

040/070 Crimp Contacts, PCB-to-Cable Applications

SOCKET CONTACT (CRIMP TYPE)

• Signal Socket Contact (4 Amps)

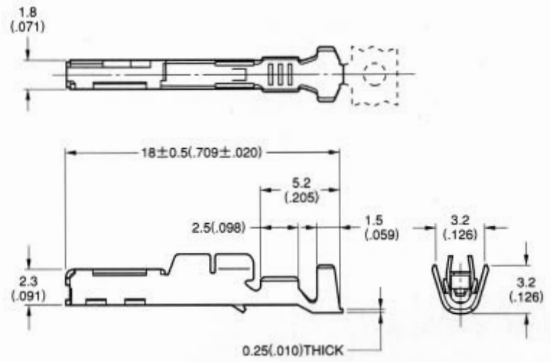

• Power Socket Contact (8 Amps)

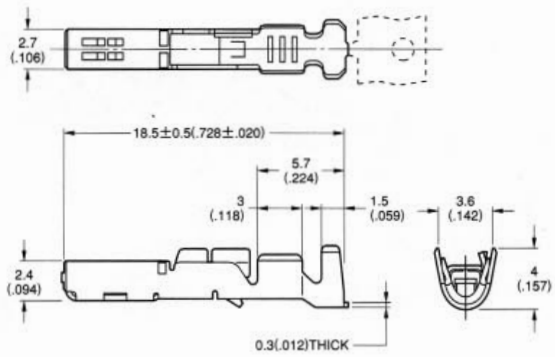

Type	Part Number (Note 1)	Finish (Note 2)	Applicable Wire (Stranded)				Applicable Tool	
			Type	AWG No.	Conductor Cross Section Area	Insulation Outer Dia.	Hand Crimp	Semi-Auto CT350-2 Type
Signal	MX5-SG-C1-5000	a	AVX	#20 to #18	0.5 to 0.85mm²	1.2 to 2.2mm (.047 to .087")	—	Applicator: 350-MX52-2
	MX5-B-SG-C2-5000	a	AVS AVSS	#24 to #20	0.2 to 0.5mm²		CT160-3-MX52	Press: CP210-1B
	MX5-B-SG-C2-1-5000	b						
Power	MX5-PW-C0-4000	a	AVS, AVX	#16	1.25mm²	2.2 to 2.9mm (.087 to .114")	—	Note 3
			AVSS	#16, #14	1.25 to 2mm²			
	MX5-B-PW-C1-4000	a	AVS AVSS AVX	#20 to #16	0.5 to 1.25mm²	1.6 to 2.6mm (.063 to .102")	CT160-3-MX51	Applicator: 350-MX51-2 Press: CP210-1B
	MX5-B-PW-C1-1-4000	b						
	MX5-B-PW-C2-4000	a		#22 to #20	0.3 to 0.5mm²	1.4 to 2.2mm (.055 to .087")	—	Note 3

Note 1: The figures following the Part No. (-4000, -5000) indicate the number of contacts per magazine assembly reel.
Note 2: Contact finishes/a-Tin Plating, b-Gold (connecting area) with Solder (SnPb, terminal area) plating over Nickel.
Note 3: Applicator for automatic crimp tool available. Please consult JAE.

- **Tooling:** (Please consult JAE for details.)

  Semi-Automatic Crimping Machine: CT350-2
  Hand Crimping Tool: CT160-3
  Contact Extraction Tool: ET-MX5

Dimensions in mm (inches).

	Hong Kong	Japan	Korea	Philippines	Singapore	Taiwan	Europe	United States
Tel:	2723-7782	03-3780-2715	2-551-8959	46-433-0276	748-1332	02-555-9711	1276-21717	949-753-2600
Fax:	2723-9028	03-3780-2883	2-551-8958	46-433-0287	748-2920	02-556-5424	1276-66165	949-753-2699