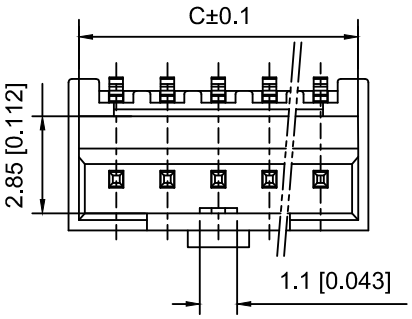

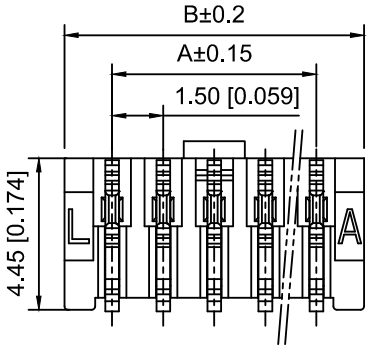

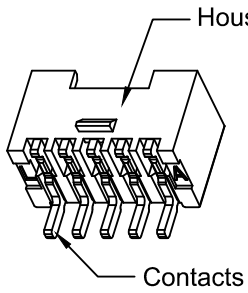

3D VIEWS

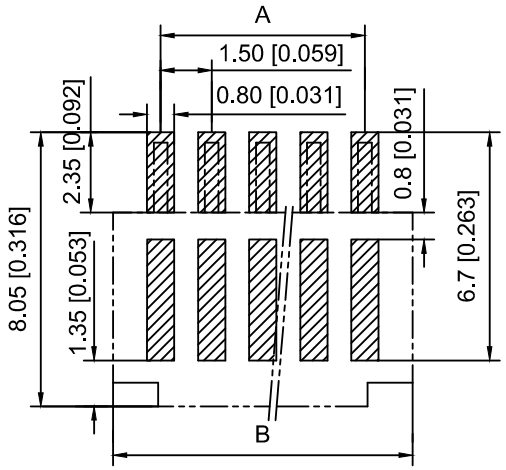

Recommended PCB Layout

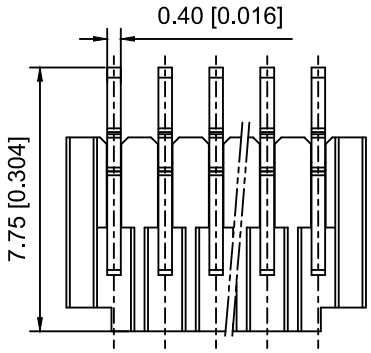

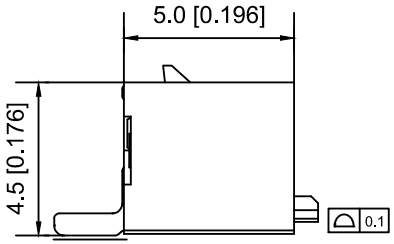

Specifications:
规格：
Voltage rating:350V AC/DC
额定电压：350V AC/DC
Current rating:3A AC/DC
额定电流：3A AC/DC
Withstanding voltage:500V AC/minute
耐受电压：500V AC/分钟
Temperature range:-25℃-+85℃
温度范围：-25℃-+85℃
Insulation resistance：1000MΩ min
绝缘电阻：1000MΩ Min
Contact resistance:20mΩ Max
接触电阻：20mΩ Max

X1511 W R S- 12 L HF -LP SW
① ② ③ ④ ⑤ ⑥ ⑦ ⑧ ⑨

1.Series No
2.Category:W-Wafer
3.Welding Board Angle:R-Straight 90°
4.Welding Way：S-SMT
5.Row No.Pin No:XX-02P-15P
6.Special No:L-With lock
7.Special No:HF-Halogen Free
8.Material:LP-LCP UL94V-0
9.Plating：SW-Matte SN Plating

Poles	DIM A	DIM B	DIM C
02	1.50	4.30	3.70
03	3.00	5.80	5.20
04	4.50	7.30	6.70
05	6.00	8.80	8.20
06	7.50	10.30	9.70
07	9.00	11.80	11.20
08	10.50	13.30	12.70
09	12.00	14.80	14.20
10	13.50	16.30	15.70
11	15.00	17.80	17.20
12	16.50	19.30	18.70
13	18.00	20.80	20.20
14	19.50	22.30	21.70
15	21.00	23.80	23.20

X1511WRS-12LHF-LPSW	LCP	Phosphor Bronze	Tin	X1511H-L
PART N0	Material	Material(Pin)	Plating	Suitable XKB Housing

MARK	DESCRIPTION	DATE	REVISED	APPROVED
ΔX				
ΔX				
ΔX				

REVISIONS

ANGLAR	±5°
L≤ 4	±0.2
4<L≤ 16	±0.3
16<L≤ 63	±0.4
L> 63	±0.5

UNSPECIFIED TOLERANCES

www.helloxkb.com www.helloxkb.cn www.xk-dg.cn

XKB INDUSTRIAL PRECISION CO.,LIMITED

DSND		SCALE: N/A	MODEL TYPE: 1.5mm Crimp Style Connector
DWN		VIEW:	PART NO.: X1511WRS-12LHF-LPSW
CHKD		UNIT: mm/in	DWG NO.: X-X1511WRS-12LHF-LPSW
APPD		SIZE: A4	

WEIGHT	SHEET	REVISION
	1/1	A0