Innovative Service Around the Globe YAGEO

DATA SHEET

SURFACE MOUNT MULTILAYER CERAMIC CAPACITORS

Automotive grade HiCap

X7R/X7S

4 V TO 100 V

1 µF to 10 µF

RoHS compliant & Halogen Free

YAGEO

Product specification – January 14, 2025 V.2



SCOPE

This specification describes Automotive grade X7R/X7S series chip capacitors with lead-free terminations and used for automotive equipments.

APPLICATIONS

All general purpose applications under normal operation and usage conditions for automotive equipments.

FEATURES

- AEC-Q200 qualified
- MSL class: MSL 1
- AC series soldering is compliant with J-STD-020D
- High component and equipment reliability
- The capacitors are 100% performed by automatic optical inspection prior to taping.

ORDERING INFORMATION - GLOBAL PART NUMBER

All part numbers are identified by the series, size, tolerance, TC material, packing style, voltage, process code, termination and capacitance value.

GLOBAL PART NUMBER

AC	XXXX	X	X	XXX	X	B	X	XXX
	(1)	(2)	(3)	(4)	(5)		(6)	(7)

(1) SIZE – INCH BASED (METRIC)

0201 (0603) / 0402 (1005) / 0603 (1608) / 0805 (2012) / 1206 (3216)/ 1210 (3225) /1812 (4532)

(2) TOLERANCE

J = ±5%

K = ±10%

M= ±20%

Capacitance tolerance ±5% doesn't available for X7R full product range, please contact local sales before order

(3) PACKING STYLE (SEE TABLE. 8 FOR DETAIL)

R = Paper/PE taping reel; Reel 7 inch

K = Blister taping reel; Reel 7 inch

P = Paper/PE taping reel; Reel 13 inch

F = Blister taping reel; Reel 13 inch

(4) TC MATERIAL

X7R : -55 °C to +125 °C (ΔC/C ± 15%)

X7S : -55 °C to +125 °C (ΔC/C ± 22%)

(5) RATED VOLTAGE

4 = 4 V

5 = 6.3 V

6 = 10 V

7 = 16 V

8 = 25 V

G = 35 V

9 = 50 V

0 = 100 V

(6) PROCESS

B = X7R/X7S

(7) CAPACITANCE VALUE

2 significant digits + number of zeros

The 3rd digit signifies the multiplying factor, and letter R is decimal point

Example: 121 = 12×10^1 = 120 pF

CONSTRUCTION

The capacitor consists of a rectangular block of ceramic dielectric in which a number of interleaved metal electrodes are contained. This structure gives rise to a high capacitance per unit volume.

The inner electrodes are connected to the two end terminations and finally covered with a layer of plated tin (Matte Sn). The terminations are lead-free. A cross section of the structure is shown in Fig.1.

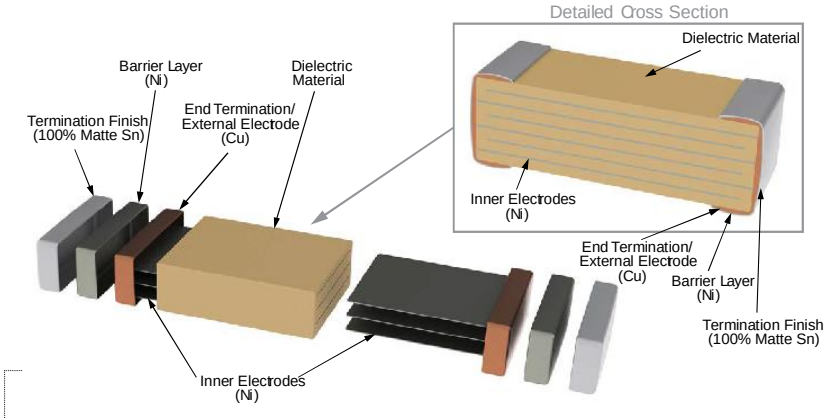

Fig. 1 Surface mounted multilayer ceramic capacitor construction

DIMENSION

Table 1 For outlines see fig. 2

TYPE	L_1 (mm)	W (mm)	T (MM)	L_2 / L_3 (mm)		L_4 (mm)
				min.	max.	min.
0201	0.6 ±0.03	0.3±0.03	0.3±0.03	0.10	0.20	0.20
0402	1.0 ±0.05	0.5 ±0.05	0.5 ±0.05	0.15	0.35	0.30
	1.0 ±0.1	0.5 ±0.1	0.5 ±0.1	0.15	0.35	0.30
0603	1.6 ±0.10	0.8 ±0.10	0.8 ±0.10	0.20	0.50	0.60
0805	2.0 ±0.10	1.25 ±0.10	0.6 ±0.10	0.25	0.75	0.70
	2.0 ±0.20	1.25 ±0.20	0.85 ±0.10			
			1.25 ±0.20			
1206	3.2 ±0.15	1.6 ±0.15	0.6 ±0.10	0.25	0.75	1.50
			0.85 ±0.10			
	3.2 ±0.30	1.6 ±0.20	1.15 ± 0.10			
			1.25 ±0.20			
			1.6 ±0.20			
	3.2 ±0.30	1.6 ±0.30	1.6 ±0.30			
1210	3.2 ±0.20	2.5 ±0.20	0.85 ±0.10	0.25	0.75	1.50
	3.2 ±0.30	2.5 ±0.20	1.25 ±0.20			
			1.6 ±0.20			
			2.0 ±0.20			
	3.2 ±0.40	2.5 ±0.30	2.5 ±0.20			
1808	4.5 ±0.40	2.0 ±0.30	1.25 ±0.20	0.25	0.75	2.20
1812	4.5 ±0.40	3.2 ±0.30	0.85 ±0.10	0.25	0.75	2.20
			1.25 ±0.20			
			1.6 ±0.20			

OUTLINES

For dimension see Table 1

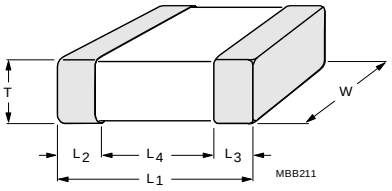

Fig. 2 Surface mounted multilayer ceramic capacitor dimension

CAPACITANCE RANGE & THICKNESS FOR X7R

Table 2 Sizes 0402

CAP.	0402	
	6.3 V	10V
1 µF	0.5± 0.1 (X7S)	0.5± 0.1 (X7S)

Table 3 Sizes from 0603 to 0805

CAP.	0603					0805					
	6.3V	10V	16 V	25 V	50 V	6.3 V	10 V	16 V	25 V	35 V	50 V
1 µF	0.8±0.1	0.8±0.1	0.8±0.1	0.8±0.1	0.8±0.1	1.25±0.2	1.25±0.2	1.25±0.2	1.25±0.2		1.25±0.2
2.2 uF	0.8±0.1	0.8±0.1				1.25±0.2	1.25±0.2	1.25±0.2	1.25±0.2	1.25±0.2	
4.7 uF						1.25±0.2	1.25±0.2	1.25±0.2			
10 uF						1.25±0.2	1.25±0.2				

Table 4 Sizes 1206

CAP.	1206						
	6.3 V	10V	16V	25V	35V	50 V	100 V
1 µF	1.15±0.10	1.15±0.10	1.15±0.10	1.60±0.2		1.60±0.2	1.60±0.2
2.2 µF	1.60±0.2	1.60±0.2	1.60±0.2			1.60±0.2	1.60±0.2
4.7 uF	1.60±0.2	1.60±0.2	1.60±0.2				
10 uF	1.60±0.2	1.60±0.2	1.60±0.2	1.60±0.2	1.60±0.3		

Table 5 Sizes 1210 to 1812

CAP.	1210				1812	
	16 V	25 V	50V	100 V	50V	100V
1 µF	1.25±0.20	1.25±0.20	1.25±0.20	2.0±0.2	1.60±0.2	1.60±0.2
2.2 µF	2.0±0.2	2.0±0.2	2.0±0.2	2.0±0.2		
4.7 µF	2.5± 0.2	2.5±0.2	2.5±0.2			

NOTE

1. Values in shaded cells indicate thickness class in mm
2. Capacitance value of non E3 series is on request

ELECTRICAL CHARACTERISTICS

X7R DIELECTRIC CAPACITORS; NI/SIN TERMINATIONS

Unless otherwise specified, all test and measurements shall be made under standard atmospheric conditions for testing as given in 5.3 of IEC 60068-1:

- Temperature: 15 °C to 35 °C
- Relative humidity: 25% to 75%
- Air pressure: 86 kPa to 106 kPa

Before the measurements are made, the capacitor shall be stored at the measuring temperature for a time sufficient to allow the entire capacitor to reach this temperature.

The period as prescribed for recovery at the end of a test is normally sufficient for this purpose.

RATED VOLTAGE AND CAPACITANCE

Table 8

DESCRIPTION							VALUE
Capacitance range							1 µF to 10µF
Dissipation factor (D.F.)							
X7R(S)	0402	0603	0805	1206	1210	1812	Spec.
≤ 6.3V				1µF			≤ 3.5%
		1µF	1µF to 2.2µF	2.2µF			≤ 5%
	1µF	2.2µF	4.7µF to 10µF	4.7µF to 10µF			≤ 10%
10V				1µF			≤ 3.5%
		1µF	1µF to 2.2µF	2.2µF			≤ 5%
	1µF	2.2µF	4.7µF to 10µF	4.7µF to 10µF			≤ 10%
16V					1µF		≤ 2.5%
				1µF			≤ 3.5%
			1µF to 2.2µF	2.2µF	2.2µF		≤ 5%
		1µF					≤ 7.5%
			4.7µF	4.7µF to 10µF	4.7µF to 10µF		≤ 10%
25V					1µF		≤ 2.5%
				1µF			≤ 3.5%
			1µF to 2.2µF	2.2µF	2.2µF		≤ 5%
		1µF					≤ 7.5%
				10µF	4.7µF to 10µF		≤ 10%
35V			2.2µF				≤ 5%
				10µF			≤ 10%
50V					1µF	1µF	≤ 2.5%
			1µF	1µF to 2.2µF	2.2µF		≤ 5%
					4.7µF		≤ 10%
100V						1µF	≤ 2.5%
				1µF to 2.2µF	1µF to 2.2µF		≤ 5%

DESCRIPTION								VALUE	
Capacitance range								1 µF to 10µF	
Insulation resistance (MΩ · µF)									
X7R(S)	0402	0603	0805	1206	1210	1812	RxC @ 25 °C	RxC @ 125 °C	
≤ 6.3V		1 µF	1 µF	2.2µF			500	50	
				1 µF			500	10	
		2.2µF	2.2µF to 10µF	10µF			100	10	
	1 µF			4.7µF			50	5	
10V		1 µF	1 µF	2.2µF			500	50	
				1 µF			500	10	
		2.2µF	2.2µF to 10µF	10µF			100	10	
	1 µF			4.7µF			50	5	
16V			1 µF	2.2µF	1 µF to 2.2µF		500	50	
				1 µF	4.7µF		500	10	
			2.2µF to 4.7µF	10µF	10µF		100	10	
		1 µF					100	5	
				4.7µF			50	5	
25V			1 µF	2.2µF	1 µF to 2.2µF		500	50	
				1 µF	4.7µF		500	10	
			2.2µF	10µF	10µF		100	10	
		1 µF					100	5	
35V			2.2µF	10µF			100	10	
50V					1 µF to 2.2µF	1 µF	500	50	
			1 µF	1 µF to 2.2µF	4.7µF		500	10	
100V					1 µF to 2.2µF	1 µF	500	50	
				1 µF to 2.2µF			500	10	

NOTE

1. Capacitance tolerance ±5% doesn't available for X5R/X6S full product range, please contact local sales force before order

SOLDERING RECOMMENDATION

Table 7

SOLDERING METHOD	SIZE 0201	0402	0603	0805	1206	≥ 1210
Reflow	○	○	○	○	○	○
Wave	---	---	○	○	○	---

SOLDERING CONDITIONS

The lead free MLCCs are able to stand the reflow soldering conditions as below:

- Temperature: above 220 °C
- Endurance: 95 to 120 seconds
- Cycles: 3 times

The test of "soldering heat resistance" is carried out in accordance with the schedule of "MIL-STD-202G-method 210F", "The robust construction of chip capacitors allows them to be completely immersed in a solder bath of 260 °C for 10 seconds". Therefore, it is possible to mount MLCCs on one side of a PCB and other discrete components on the reverse (mixed PCBs). Surface Mount Capacitors are tested for solderability at 245 °C during 2 seconds. The test condition for no leaching is 260°C for 30 seconds.

TESTS AND REQUIREMENTS

Table 8 Test procedures and requirements

NO	AEC-Q200 TEST	TEST METHOD	REQUIREMENTS
4	Temperature Cycling	Preconditioning; 150 +0/–10 °C for 1 hour, then keep for 24 ±1 hours at room temperature 1000 cycles with following detail: 15 minutes at lower category temperature 15 minutes at upper category temperature Measurement at least 24 hours after test conclusion.	No visual damage ΔC/C X7R: ±10% D.F. meet initial specified value IR meet initial specified value
5	Destructive Physical Analysis	Electrical test not required.	
7	Biased Humidity	1. Preconditioning: 150 +0/-10 °C /1 hour, then keep for 24 ±1 hour at room temp 2. Test condition: 85 °C, 85% R.H. connected with 100 KΩ resistor, applied 1.5V/U_r (no more than 630V) for 1,000 hours. 3. Recovery: X7R/X7S: 24 ±2 hours 4. Final measure: C. D. I.R. Measurement at least 24 hours after test conclusion.	No visual damage after recovery ΔC/C X7R/X7S: ±15% D.F. X7R/X7S: Less than 200% of initial spec. I.R. The insulation resistance shall greater than 10% of initial spec.

8	High Temperature Operational Life	1. Preconditioning: 150 +0/-10 °C /1 hour, then keep for 24 ±1 hour at room temp Temperature: 125 °C Specified stress voltage applied for 1,000 hours: Applied 150% x Ur. Measurement at least 24 hours after test conclusion. Note: If the capacitance value is less than the minimum value permitted, then after the other measurements have been made the capacitor shall be preconditioned according to "IEC 60384" and then the requirement shall be met.	No visual damage ΔC/C X7R/X7S: ±15% D.F. Less than 200% of initial spec. IR The insulation resistance shall be greater than 10% of initial spec.
9	External Visual	Any applicable method using × 10 magnification	In accordance with specification
10	Physical Dimension	Verify physical dimensions to the applicable device specification.	In accordance with specification
13	Mechanical Shock	Three shocks in each direction shall be applied along the three mutually perpendicular axes of the test specimen (18 shocks) Peak value: 100 g's Duration: 6 ms Velocity change: 12.3 ft/s Waveform: Half-sin	ΔC/C X7R/X7S: ±10% D.F. Within initial specified value IR Within initial specified value
14	Vibration	5 g's for 20 minutes, 12 cycles each of 3 orientations. Test from 10-2000 Hz.	ΔC/C X7R/X7S: ±10% D.F: meet initial specified value IR meet initial specified value
15	Resistance to Soldering Heat	Precondition: 150 +0/–10 °C for 1 hour, then keep for 24 ±1 hours at room temperature Follow MIL-STD-202 method 210 condition k, time above 217 deg-C , 60s to 150s.	Dissolution of the end face plating shall not exceed 25% of the length of the edge concerned ΔC/C X7R/X7S: ±10% D.F. within initial specified value IR within initial specified value

<table>
<tr><td rowspan="2">17</td><td rowspan="2">ESD</td><td>Per AEC-Q200-002</td><td>A component passes a voltage level if all components stressed at that voltage level pass.</td></tr>
<tr><td colspan="2">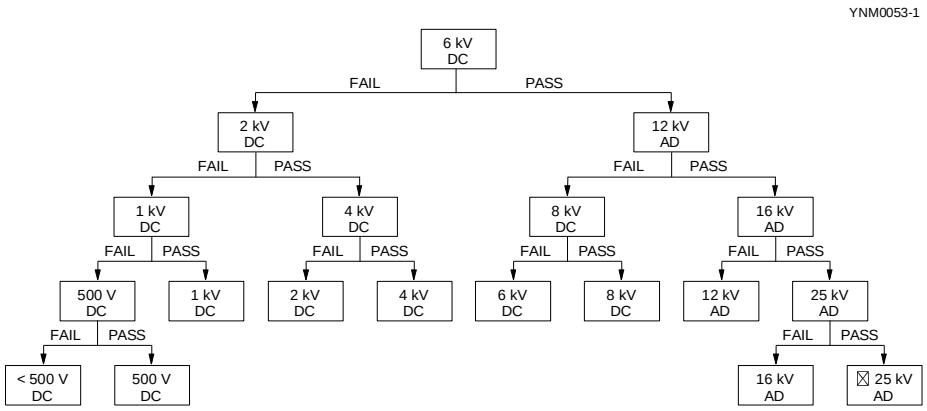

Note: Classify the components according to the highest ESD voltage level survived during ESD testing.
Fig. 3 Passive component HBM ESD test flow diagram
(DC = Direct Contact Discharge, AD = Air Discharge)</td></tr>
<tr><td>18</td><td>Solderability</td><td>1. J-STD-002 Method B1, coating durability category 2. Preheat at 155°C for 4 hours. After preheating, immerse the capacitor in a solution of ethanol and rosin. Immerse in eutectic solder solution for 5+0/-0.5 seconds at 245± 5°C.
2. J-STD-002 Method D, Coating Durability Category 2.
3. Should be placed into steam aging. After preheating, immerse the capacitor in a solution of Ethanol and rosin. Immerse in eutectic solder solution for 30 seconds at 260± 5°C.</td><td>The solder should cover over 95% of the critical area of each termination.</td></tr>
</table>

<table>
<tr><td rowspan="5">19</td><td rowspan="5">Electrical Characterization</td><td>Capacitance</td><td>X7R/X7S:
At 25 °C, 24 hours after annealing
f = 1±0.1 KHz, measuring at voltage 1±0.2 V_{rms} at 25 °C</td><td>Within specified tolerance</td></tr>
<tr><td>Dissipation Factor (D.F.)</td><td>X7R/X7S:
At 25 °C, 24 hours after annealing
f = 1±0.1 KHz, measuring at voltage 1±0.2 V_{rms} at 25 °C</td><td>In accordance with specification on Table 5</td></tr>
<tr><td>Insulation Resistance (I.R.)</td><td>At U_r (DC) for 1 minute</td><td>In accordance with specification on Table 5</td></tr>
<tr><td>Temperature coefficient</td><td>Capacitance shall be measured by the steps shown in the following table.
The capacitance change should be measured after 5 min at each specified temperature stage.
<table><tr><td>Step</td><td>Temperature(°C)</td></tr><tr><td>a</td><td>25±2</td></tr><tr><td>b</td><td>Lower temperature±3°C</td></tr><tr><td>c</td><td>25±2</td></tr><tr><td>d</td><td>Upper Temperature±2°C</td></tr><tr><td>e</td><td>25±2</td></tr></table>
X7R(S)
Capacitance Change shall be calculated from the formula as below
$\Delta C = \frac{C2 - C1}{C1} \times 100\%$
C1: Capacitance at step c
C2: Capacitance at step b or d</td><td>ΔC/C

X7R: ±15%
X7S: ± 22%</td></tr>
<tr><td>Voltage Proof</td><td>1. Specified stress voltage applied for 1~5 seconds
2. Ur ≤ 100 V: series applied 2.5 Ur
Charge/Discharge current is less than 50 mA</td><td>No breakdown or flashover</td></tr>
</table>

<table>
<tr>
<td>21</td>
<td>Board Flex</td>
<td>Part mounted on a 100mm × 40mm FR4 PCB board, which is 1.6±0.2 mm thick and has a layer-thickness 35μm±10 μm.
Part should be mounted using the following soldering reflow profile.
Conditions:
X7R/X7S:
Bending 2 mm at a rate of 1 mm/s, radius jig 340 mm

Test Substrate:
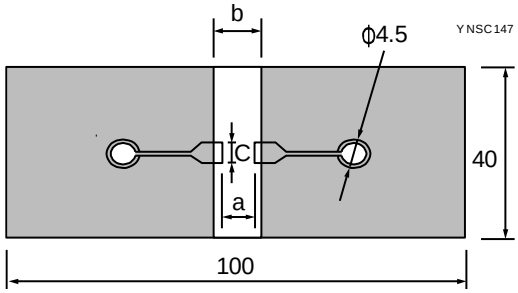

unit: mm</td>
<td>No visual damage
ΔC/C
X7R/X7S: ±10%

<table>
<tr><th></th><th colspan="3">Dimension(mm)</th></tr>
<tr><th>Type</th><th>a</th><th>b</th><th>c</th></tr>
<tr><td>0201</td><td>0.3</td><td>0.9</td><td>0.3</td></tr>
<tr><td>0402</td><td>0.4</td><td>1.5</td><td>0.5</td></tr>
<tr><td>0603</td><td>1.0</td><td>3.0</td><td>1.2</td></tr>
<tr><td>0805</td><td>1.2</td><td>4.0</td><td>1.65</td></tr>
<tr><td>1206</td><td>2.2</td><td>5.0</td><td>1.65</td></tr>
<tr><td>1210</td><td>2.2</td><td>5.0</td><td>2.0</td></tr>
<tr><td>1808</td><td>3.5</td><td>7.0</td><td>3.7</td></tr>
</table>
</td>
</tr>
<tr>
<td>22</td>
<td>Terminal Strength</td>
<td>With the component mounted on a PCB obtained with the device to be tested, apply a 17.7N (1.8Kg) force to the side of a device being tested.
This force shall be applied for 60+1 seconds.
Also the force shall be applied gradually as not to apply a shock to the component being tested.
* Apply 2N force for 0402 size.
* Apply 1N force for 0201 size.</td>
<td>Magnification of 20X or greater may be employed for inspection of the mechanical integrity of the device body, terminals and body/terminal junction.
Before, during and after the test, the device shall comply with all electrical requirements stated in this specification.</td>
</tr>
</table>

THICKNESS CLASSES AND PACKING QUANTITY

Table 9

SIZE CODE	THICKNESS CLASSIFICATION	PACKING CODE		TAPE WIDTH	QUANTITY PER REEL			
					Ø180 MM / 7 INCH		Ø330 MM / 13 INCH	
		7 INCH	13 INCH		Paper	Blister	Paper	Blister
0201	0.3 ±0.03 mm	R	P	8 mm	15,000	---	50,000	---
0402	0.5 ±0.05 mm	R	P	8 mm	10,000	---	50,000	---
0603	0.8 ±0.1 mm	R	P	8 mm	4,000	---	15,000	---
0805	0.6 ±0.1 mm	R	P	8 mm	4,000	---	20,000	---
	0.85 ±0.1 mm	R	P	8 mm	4,000	---	15,000	---
	1.25 ±0.2 mm	K	F	8 mm	---	3,000	---	10,000
1206	0.6 ±0.1 mm	R	P	8 mm	4,000	---	20,000	---
	0.85 ±0.1 mm	R	P	8 mm	4,000	---	15,000	---
	1.0/1.15 ±0.1 mm	K	F	8 mm	---	3,000	---	10,000
	1.25 ±0.2 mm	K	F	8 mm	---	3,000	---	10,000
	1.60 ±0.2 mm	K	F	8 mm	---	2,000	---	8,000
1210	0.85 ±0.1 mm	K	F	8 mm	---	4,000	---	10,000
	1.15 ±0.1 mm	K	F	8 mm	---	3,000	---	10,000
	1.25 ±0.2 mm	K	F	8 mm	---	3,000	---	10,000
	2.0 ±0.2 mm	K		8 mm	---	2,000	---	---
	2.5 ±0.2 mm	K		8 mm	---	1,000	---	---
1812	0.6 / 0.85±0.1 mm	K		12 mm	---	2,000	---	---
	1.15±0.1 mm	K		12 mm	---	1,000	---	---
	1.25±0.2 mm	K		12 mm	---	1,000	---	---
	1.6 ±0.2 mm	K		12 mm	---	2,000	---	---

PAPER/PE TAPE SPECIFICATION

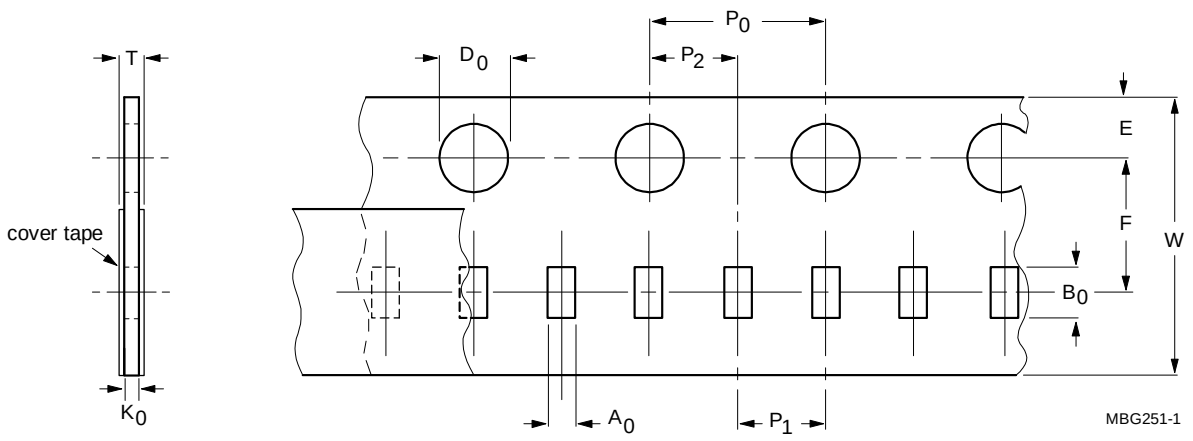

Fig. 4 Paper/PE tape

Table 10 Dimensions of paper/PE tape for relevant chip size; see Fig.4

SIZE CODE	SYMBOL										Unit: mm
	A0	B0	W	E	F	P0 (1)	P1	P2	ØD0	K0	T
0201	0.39±0.06	0.70±0.06	8.0±0.20	1.75±0.1	3.50±0.05	4.0±0.05	2.0±0.05	2.0±0.05	1.55±0.03	0.38 ± 0.05	(0.47 / 0.55)±0.10
0402	0.70±0.15	1.21±0.12	8.0±0.20	1.75±0.1	3.50±0.05	4.0±0.05	2.0±0.05	2.0±0.05	1.50+0.1 /-0	(0.75 / 0.60)±0.10	(0.85 / 0.70)±0.10
0603	1.05±0.14	1.86±0.13	8.0±0.20	1.75±0.1	3.50±0.05	4.0±0.10	4.0±0.10	2.0±0.05	1.50+0.1 /-0	(1.05 / 0.95 / 0.75)±0.10	(1.15 / 1.05 / 0.85)±0.10
0805	1.50±0.15	2.26±0.20	8.0±0.20	1.75±0.1	3.50±0.05	4.0±0.10	4.0±0.10	2.0±0.05	1.50+0.1 /-0	(1.05 / 0.95 / 0.75)±0.10	(1.15 / 1.05 / 0.85)±0.10
1206	1.90±0.15	3.50±0.20	8.0±0.20	1.75±0.1	3.50±0.05	4.0±0.10	4.0±0.10	2.0±0.05	1.50+0.1 /-0	(0.95 / 0.75)±0.10	(1.05 / 0.85)± 0.10

NOTE

P_0 pitch tolerance over any 10 pitches is ±0.2 mm

BLISTER TAPE SPECIFICATION

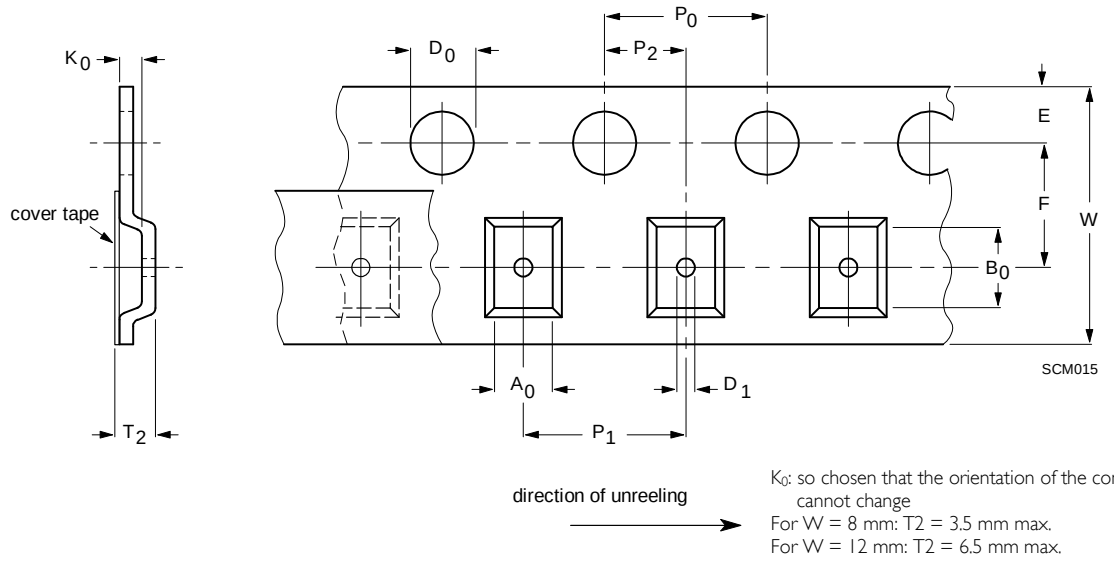

Fig. 5 Blister tape

Table 11 Dimensions of blister tape for relevant chip size; see Fig.5

SIZE CODE	SYMBOL															Unit: mm
	A_0		B_0		K_0		W	E	F	$ØD_0$	$ØD_1$	P_0 (2)	P_1	P_2	T2	
	Min.	Max.	Min.	Max.	Min.	Max.					Min.				Min.	Max.
0805	1.29	1.65	2.09	2.60	1.25	1.62	8.1 ±0.20	1.75 ±0.1	3.5 ±0.05	1.5 +0.1/-0.0	1 +0.1/-0.0	4.0 ±0.10	4.0 ±0.10	2.0 ±0.05	1.30	1.67
1206	1.65	2.12	3.30	3.75	1.22	2.15	8.1 ±0.20	1.75 ±0.1	3.5 ±0.05	1.5 +0.1/-0.0	1 +0.1/-0.0	4.0 ±0.10	4.0 ±0.10	2.0 ±0.05	1.27	2.20
1210	2.55	3.02	3.31	3.88	0.97	2.92	8.1 ±0.20	1.75 ±0.1	3.5 ±0.05	1.5 +0.1/-0.0	1 +0.1/-0.0	4.0 ±0.10	4.0 ±0.10	2.0 ±0.05	1.02	2.97
1808	2.05	2.55	4.80	5.45	1.30	2.45	12.1 ±0.20	1.75 ±0.1	5.5 ±0.05	1.5 +0.1/-0.0	1.5 +0.1/-0.0	4.0 ±0.10	4.0 ±0.10	2.0 ±0.05	1.35	2.50
1812	3.35	3.75	4.70	5.33	0.70	2.40	12.1 ±0.20	1.75 ±0.1	5.5 ±0.05	1.5 +0.1/-0.0	1.5 +0.1/-0.0	4.0 ±0.10	8.0 ±0.10	2.0 ±0.05	0.75	2.45

NOTE

1. Typical capacitor displacement in pocket
2. P_0 pitch tolerance over any 10 pitches is ±0.2 mm

REEL SPECIFICATION

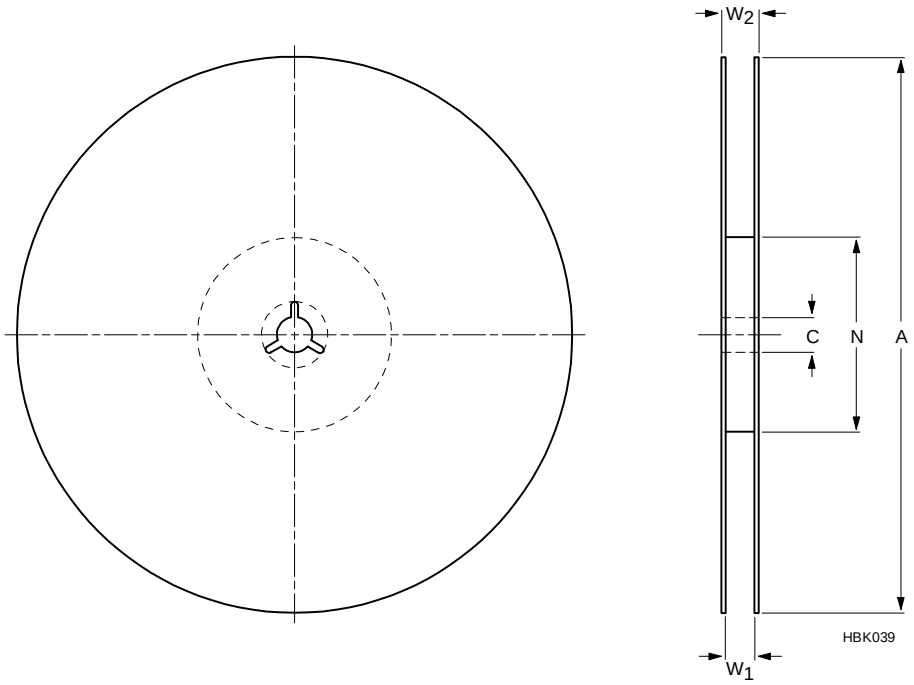

Fig. 6 Reel

Table12 Reel dimensions; see Fig.6

TAPE WIDTH	SYMBOL				Unit: mm
	A	N	C	W_1	$W_{2max.}$
8 (Ø178 mm/7")	178 ±1.0	60 ±1.0	13 +0.50/-0.20	9.4 ±1.5	14.4
8 (Ø330 mm/13")	330 ±1.0	100 ±1.0	13 +0.50/-0.20	9.0 ±0.2	14.4
12 (Ø178 mm/7")	178 ±1.0	60 ±1.0	13 +0.50/-0.20	13.4 ±1.5	18.4

PROPERTIES OF REEL

Material: polystyrene
Surface resistance: $<10^{10}$ Ω/sq.

MOUNTING

SOLDER REPAIRS

Conventional solder repairs are carried out with a soldering iron as shown as Tab.13. The tip of the soldering iron should not directly touch the chip component to avoid thermal shock on the interface between termination and body during mounting, repairing or de-mounting processes. Ensure the termination solder has melted before removing the chip component.

Table 13 Recommended soldering iron condition

SIZE	Temp(°C)	DURATION (SEC.)	PREHEATING TEMP(°C)	ATMOSPHERE
0201/0402/0603/0805/1206	350 max.	3 max.	150 min.	air
1210/1808/1812/2220	280 max.	3 max.	150 min.	air

SOLDERING CONDITIONS

For normal use the capacitors may be mounted on printed-circuit boards or ceramic substrates by applying wave soldering, reflow soldering or conductive adhesive in accordance with *IEC 61760-1* (Standard method for the specification of surface mounting components). For advised soldering profiles see Figs 8, 9, 10.

An improper combination of soldering, substrate and chip size can lead to a damaging of the component. The risk increases with the chip size and with temperature fluctuations (>100 °C).

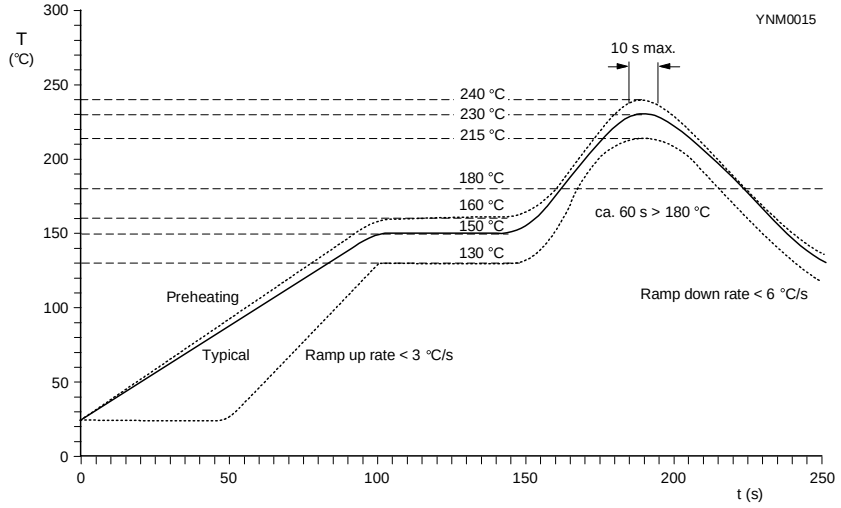

Solid line: Typical process (terminal temperature)
Dotted lines: Process limits - bottom process limit (terminal temperature) & upper process limit (top surface temperature).

Fig. 7 Infrared soldering, forced gas convection reflow soldering - Temperature/time profile for SnPb solders

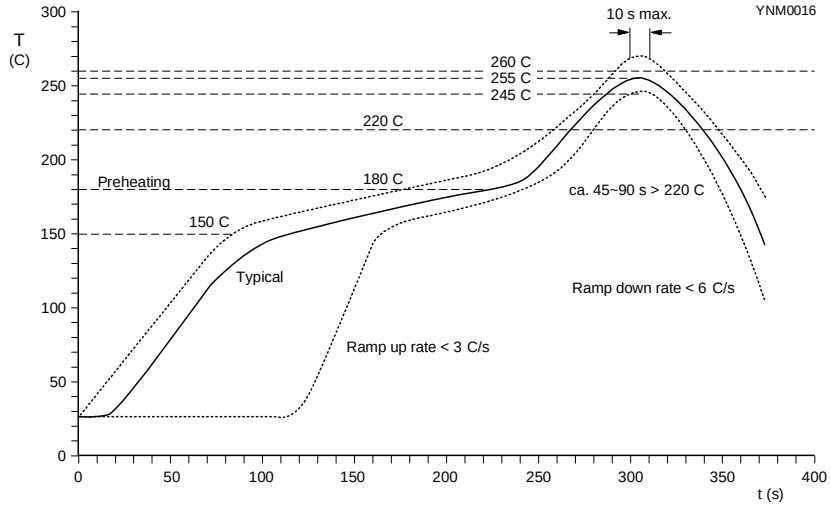

Solid line: Typical process (terminal temperature)
Dotted lines: Process limits - bottom process limit (terminal temperature) & upper process limit (top surface temperature).

Fig. 8 Infrared soldering, forced gas convection reflow soldering - Temperature/time profile for lead-free SnAgCu solders

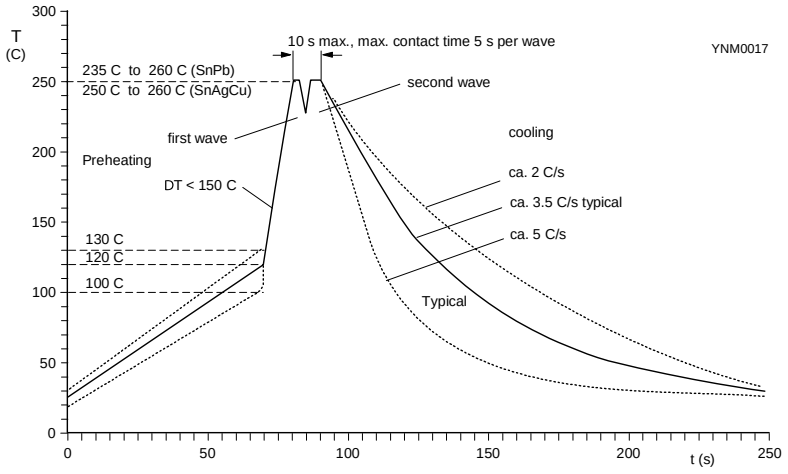

Solid line: Typical process
Dotted lines: Process limits

Fig. 9 Double wave soldering for SnPb and lead-free SnAgCu solder - Temperature/time profile (terminal temperature)

FOOTPRINT DIMENSIONS

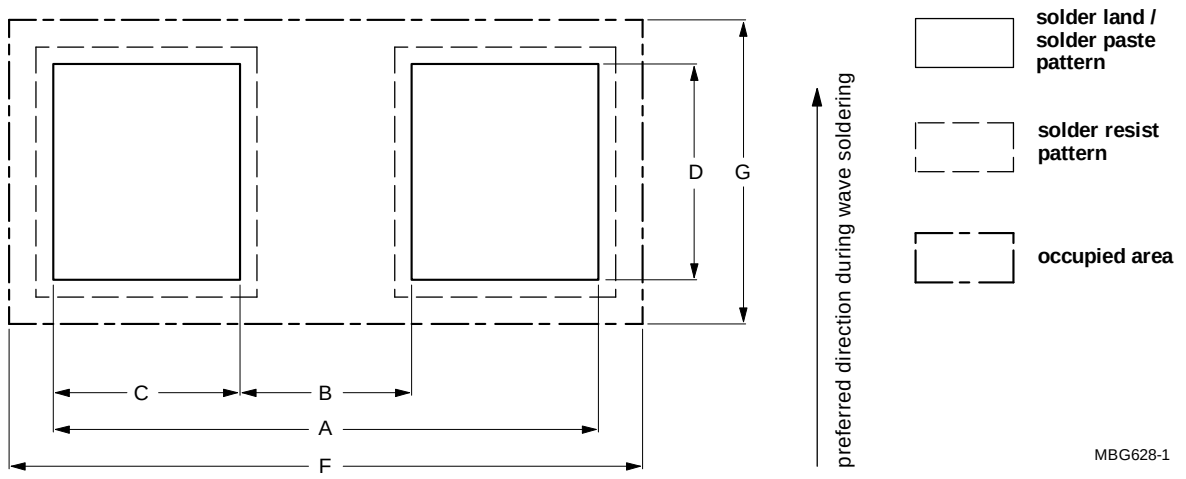

Fig. 10 **Discrete capacitors** recommended dimensions of footprint

Table 14 Reflow soldering; for footprint dimensions see Fig.10

SIZE	FOOTPRINT DIMENSIONS						Unit: mm
CODE	A	B	C	D	F	G	Processing remarks
0201	0.8 ±0.20	0.25 ±0.05	0.28 ±0.07	0.3 ±0.10	---	---	
0402	1.5 ±0.15	0.5 ±0.15	0.5 ±0.15	0.5 ±0.15	1.75 ±0.15	0.95 ±0.15	
0603(1)	2.3 ±0.15	0.7 ±0.15	0.8 ±0.15	0.9 ±0.15	2.7 ±0.15	1.5 ±0.15	
0603(2)	2.3 ±0.25	0.5 ±0.25	0.9 ±0.25	0.9 ±0.25	2.7 ±0.25	1.5 ±0.25	IR or hot plate soldering
0805	2.8 ±0.25	0.9 ±0.25	0.95 ±0.25	1.4 ±0.25	3.2 ±0.25	2.1 ±0.25	
1206	4.0 ±0.25	2.0 ±0.25	1.0 ±0.25	1.8 ±0.25	4.4 ±0.25	2.5 ±0.25	
1210	4.0 ±0.25	2.0 ±0.25	1.0 ±0.25	2.7 ±0.25	4.4 ±0.25	3.4 ±0.25	
1808	5.4 ±0.25	3.3 ±0.25	1.05 ±0.25	2.3 ±0.25	5.8 ±0.25	2.9 ±0.25	
1812	5.4 ±0.25	3.3 ±0.25	1.05 ±0.25	3.5 ±0.25	5.8 ±0.25	4.1 ±0.25	Ceramic substrate only
2220	6.6 ±0.25	4.5 ±0.25	1.05 ±0.25	5.3 ±0.25	7.0 ±0.25	5.9 ±0.25	

NOTE

1. For 0603 length 1.6 +/-0.1mm products..
2. For 0603 length 1.6 +/-0.15 and 1.6 +/-0.2 mm products.

REVISION HISTORY

REVISION	DATE	CHANGE NOTIFICATION	DESCRIPTION
Version 2	Jan. 14, 2025	-	- Revise AEC-Q200 test condition to version E. - Add X7S/0402/1uF/6.3V to 10V - Add X7R/0603/2.2uF/6.3V to 10V - Add X7R/0805/1uF to 4.7uF/6.3V - Add X7R/1206/1uF/6.3V, 2.2uF/6.3V to 10V, 10uF/6.3V to 35V - Add X7R/1210/1uF/16V, 2.2uF/16V to 25V, 4.7uF/16V, 10uF/16V to 25V
Version 1	Sep. 15, 2022	-	- Add 0805/X7R/10V/10uF
Version 0	Aug. 31, 2022	-	- New

LEGAL DISCLAIMER

YAGEO, its distributors and agents (collectively, "YAGEO"), hereby disclaims any and all liabilities for any errors, inaccuracies or incompleteness contained in any product related information, including but not limited to product specifications, datasheets, pictures and/or graphics. YAGEO may make changes, modifications and/or improvements to product related information at any time and without notice.

YAGEO makes no representation, warranty, and/or guarantee about the fitness of its products for any particular purpose or the continuing production of any of its products. To the maximum extent permitted by law, YAGEO disclaims (i) any and all liability arising out of the application or use of any YAGEO product, (ii) any and all liability, including without limitation special, consequential or incidental damages, and (iii) any and all implied warranties, including warranties of fitness for a particular purpose, non-infringement and merchantability.

YAGEO products are designed for general purpose applications under normal operation and usage conditions. Please contact YAGEO for the applications listed below which require especially high reliability for the prevention of defects which might directly cause damage to the third party's life, body or property: Aerospace equipment (artificial satellite, rocket, etc.), Atomic energy-related equipment, Aviation equipment, Disaster prevention equipment, crime prevention equipment, Electric heating apparatus, burning equipment, Highly public information network equipment, data-processing equipment , Medical devices, Military equipment, Power generation control equipment, Safety equipment, Traffic signal equipment, Transportation equipment and Undersea equipment, or for any other application or use in which the failure of YAGEO products could result in personal injury or death, or serious property damage.

Information provided here is intended to indicate product specifications only. YAGEO reserves all the rights for revising this content without further notification, as long as products are unchanged. Any product change will be announced by PCN.