THIS DRAWING IS UNPUBLISHED. RELEASED FOR PUBLICATION -,- .
© COPYRIGHT - By - ALL RIGHTS RESERVED.

LOC	DIST
—	—

REVISIONS

P	LTR	DESCRIPTION	DATE	DWN	APVD
	C	REVISED PER ECR-13-001204	04JUL13	KH	PD

1 SUPPLIED IN LOOSE PIECE

2 0.00381[.000150] MIN TIN OVER
0.00254[.000100] MIN THK COPPER.

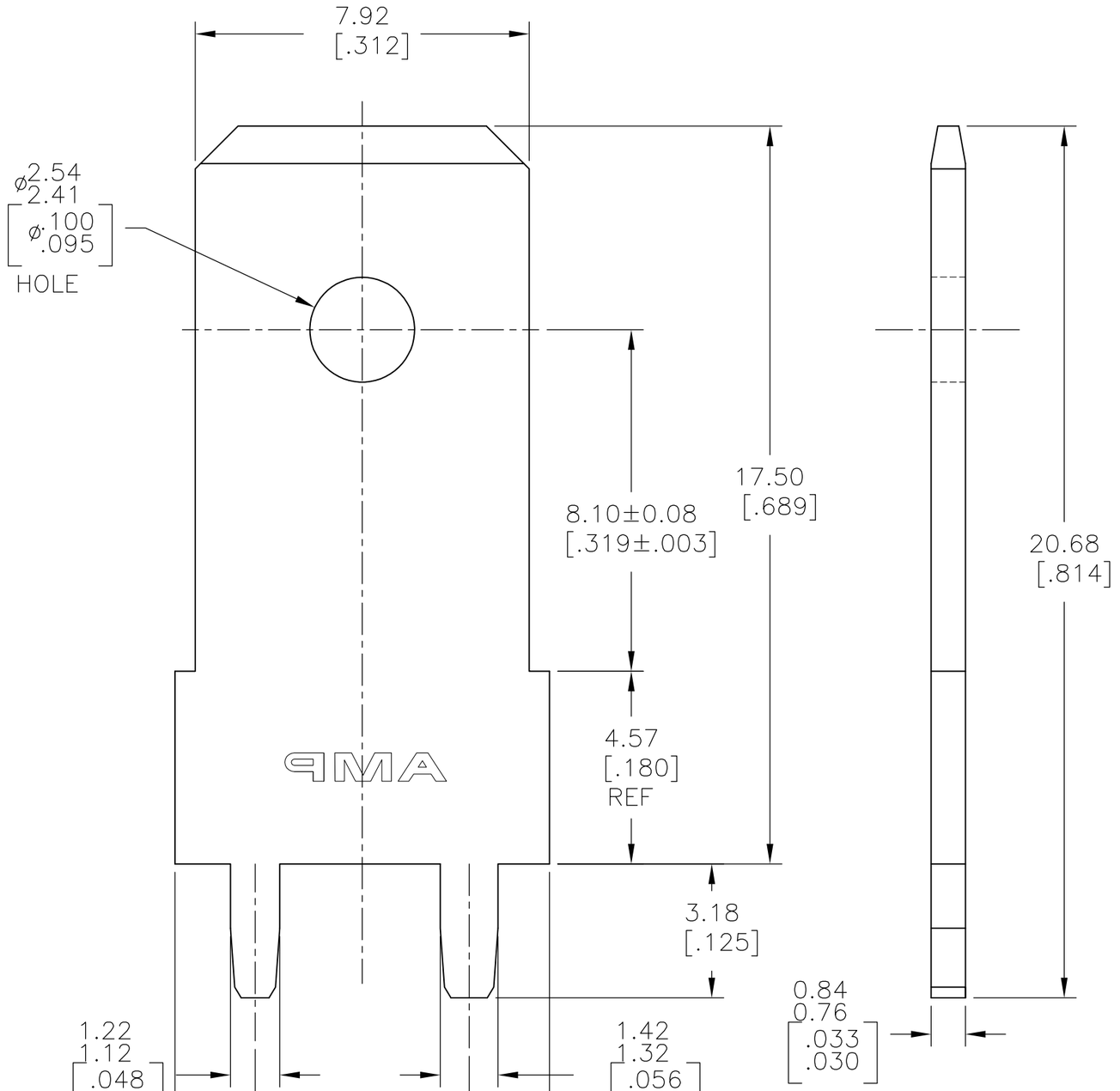

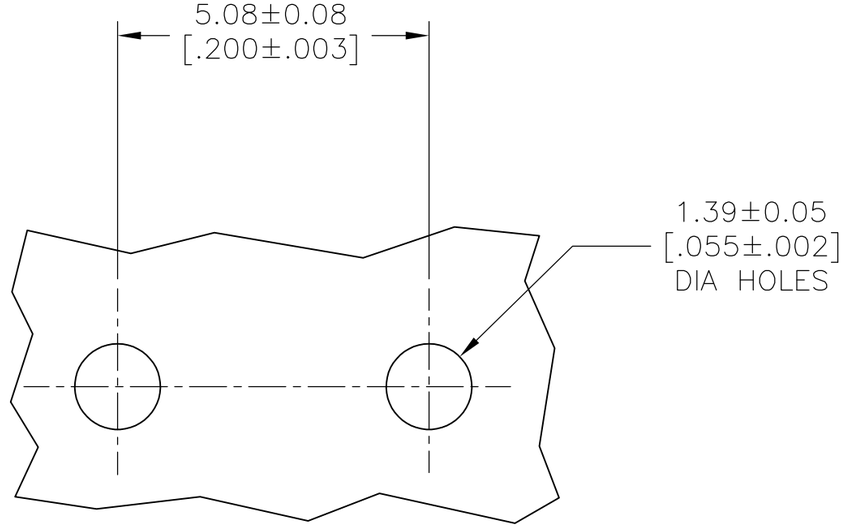

P.C.BOARD HOLES
SCALE 10:1

1742803-1
PART NUMBER

THIS DRAWING IS A CONTROLLED DOCUMENT.

DIMENSIONS: mm [INCHES]

TOLERANCES UNLESS OTHERWISE SPECIFIED:
0 PLC ± -
1 PLC ± -
2 PLC ± .010
3 PLC ± -
4 PLC ± -
ANGLES ± -

MATERIAL: BRASS

FINISH: TIN OVER COPPER 2

DWN	S SCHLEGEL	19MAY03
CHK	P DESANTIS	7/20/09
APVD	P DESANTIS	7/20/09
PRODUCT SPEC	—	
APPLICATION SPEC	—	
WEIGHT	—	

CUSTOMER DRAWING

TE Connectivity

NAME: TAB, FASTON, PC BOARD, .312 SERIES

SIZE	CAGE CODE	DRAWING NO	RESTRICTED TO
A3	00779	C-1742803	—

SCALE	SHEET	REV
8:1	1 OF 1	C