BORN SEMICONDUCTOR

BSLVU2.8-8

ESD Protection Diode

Features

- 600W Peak pulse power per line (tp = 8/20μs)
- Low clamping voltage
- Low leakage current
- Low capacitance (Cj=3.0 pF)
- Protects Up To Four Line Pairs
- IEC 61000-4-2 ±30kV contact ; ±30kV air
- IEC 61000-4-4 (EFT) 40A (5/50ns)
- IEC 61000-4-5 (Lightning) 30A(8/20μs)

Package

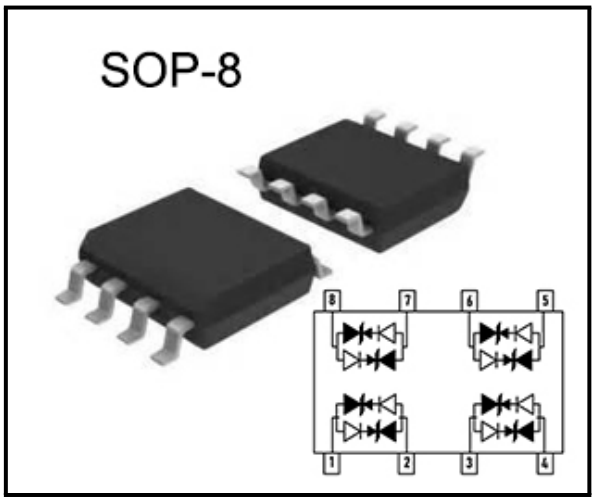

Applications

- 10/100 Ethernet
- Integrated magnetics/RJ-45 connectors
- LAN/WAN Equipment
- Security Cameras
- Industrial Controls
- Peripherals
- Notebooks & Desktop Computers

Mechanical Characteristics

- SOP8 package
- Molding compound flammability rating: UL 94V-0
- Packaging: Tape and Reel
- RoHS/WEEE Compliant

Marking

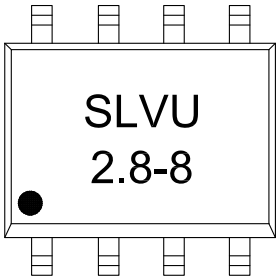

Ordering information

Order code	Package	Base qty	Delivery mode
BSLVU2.8-8	SOP8	3K	Tape and reel

BORN SEMICONDUCTOR , INC. ALL RIGHT RESERVED

Specifications are subject to change without notice.
Please refer to http://*www.born-tw.com* for current information.

Revision: 2022-Jan-1-A

BSLVU2.8-8

ESD Protection Diode

Electrical Parameters (T_A = 25°C unless otherwise noted)

Symbol	Parameter
V_{RWM}	Peak Reverse Working Voltage
I_R	Reverse Leakage Current @ V_{RWM}
I_{PP}	Maximum Reverse Peak Pulse Current
V_C	Clamping Voltage @ I_{PP}
V_{BR}	Breakdown Voltage @ I_T
I_T	Test Current

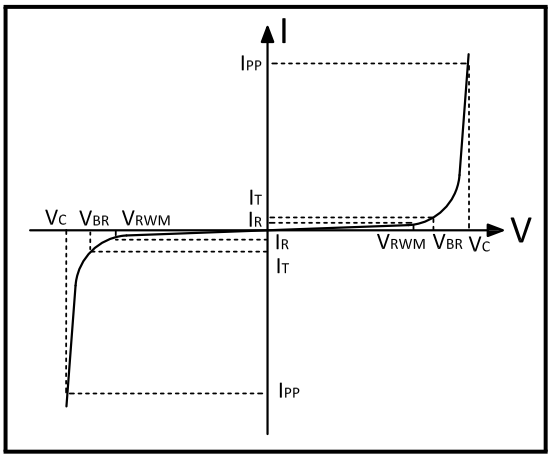

Absolute Maximum Rating

Rating	Symber	Value	Units
Peak Pulse Power (tp =8/20μs)	P_{PP}	600	Watts
Peak Pulse Current (tp =8/20μs)	I_{PP}	30	A
ESD per IEC 61000-4-2 (Air) ESD per IEC 61000-4-2 (Contact)	V_{ESD}	30 30	KV
Lead Soldering Temperature	T_L	260(10seconds)	°C
Junction Temperature	T_J	-55 to + 150	°C
Storage Temperature	T_{stg}	-55 to + 150	°C

Electrical Characteristics

Parameter	Symber	Conditions	Min	Typical	Max	Units
Reverse Stand-Off Voltage	V_{RWM}	–	–	–	2.8	V
Reverse Breakdown Voltage	V_{BR}	I_T=1mA	3.5	–	–	V
Reverse Leakage Current	I_R	V_{RWM}=2.8V,T=25°C	–	0.05	0.5	uA
Clamping Voltage	V_C	I_{PP}=5A, tp =8/20us	–	–	10	V
Clamping Voltage	V_C	I_{PP}=30A, tp =8/20us	–	15	20	V
Junction Capacitance	C_j	V_R=0V,f=1MHZ,Each line	–	3.0	6.0	pF

BORN SEMICONDUCTOR , INC. ALL RIGHT RESERVED

Specifications are subject to change without notice.
Please refer to http://*www.born-tw.com* for current information.

BSLVU2.8-8

ESD Protection Diode

Typical Characteristics

Figure 1: Peak Pulse Power vs. Pulse Time

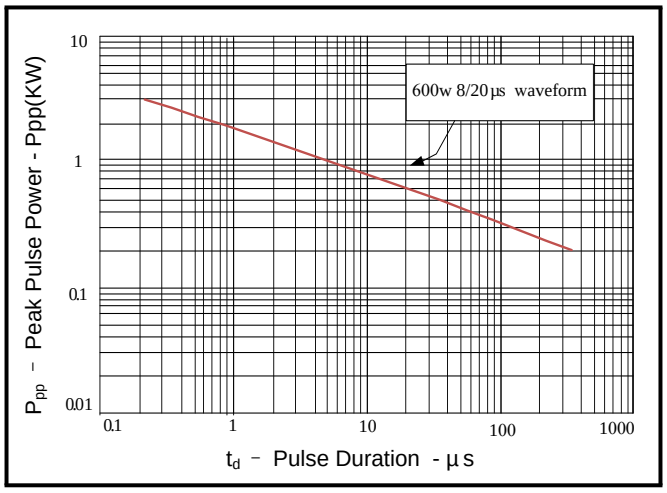

Figure 2: Power Derating Curve

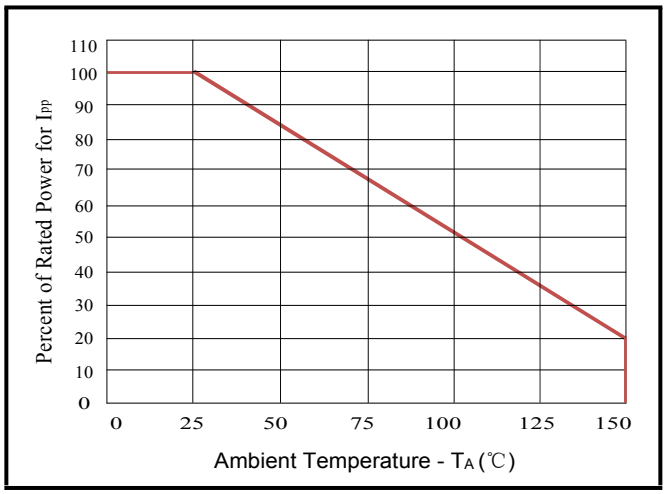

Figure 3: Pulse Waveform

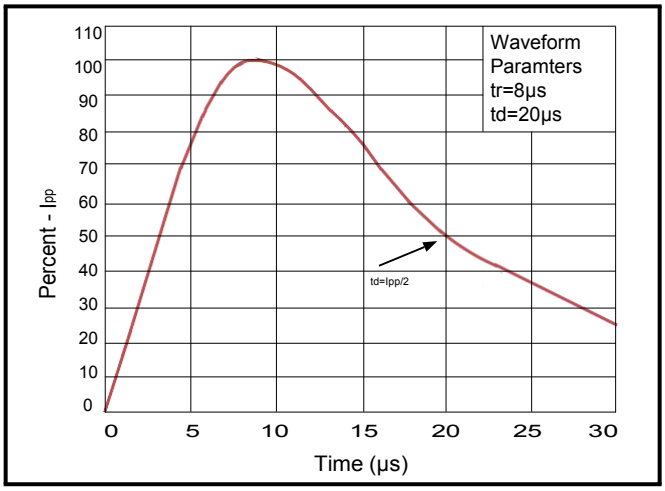

Figure 4: Clamping Voltage vs. I_{PP}

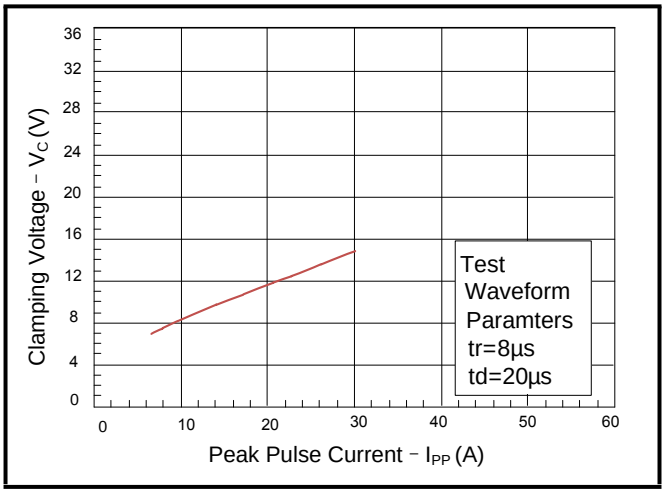

Figure 5 : Eye Diagram - HDMI mask at 5.0Gbps per channel

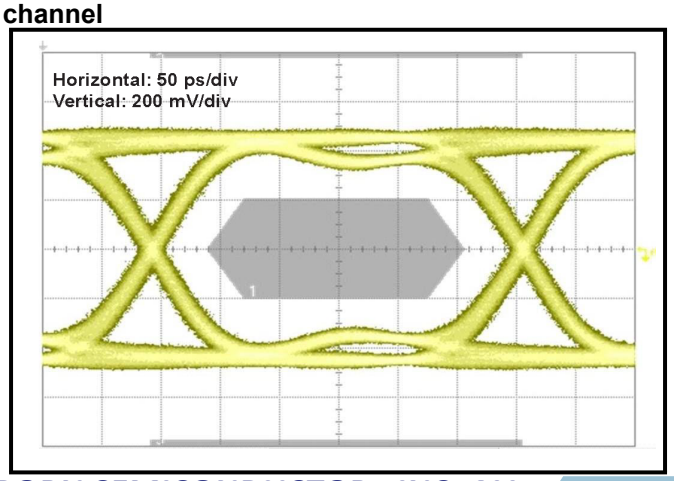

Figure 6 : Insertion Loss S21

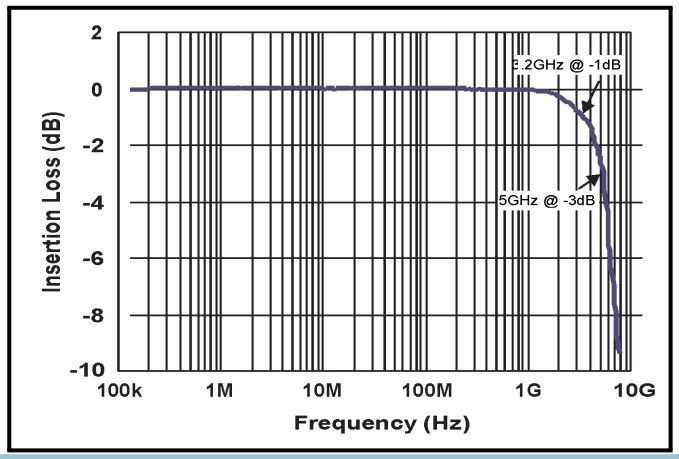

BORN SEMICONDUCTOR , INC. ALL RIGHT RESERVED

BSLVU2.8-8

ESD Protection Diode

Application Information

Device Connection for Protection of Eight Data Lines Electronic equipment is susceptible to transient distur-bances from a variety of sources including: ESD to an open connector or interface, direct or nearby lightning strikes to cables and wires, and charged cables “hot plugged” into I/O ports. The BSLVU2.8-8 is designed to protect sensitive components from damage and latch-up which may result from such transient events. The BSLVU2.8-8 can be configured to protect four high-speed line pairs differentially, or four lines to ground (common mode). The device is connected as follows:

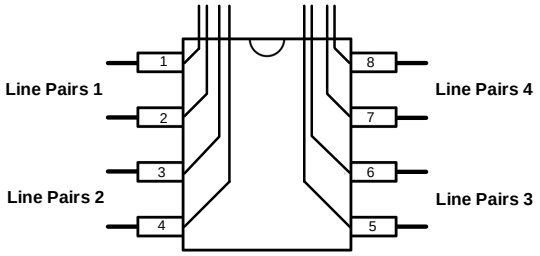

Differential Protection of Four Line Pairs

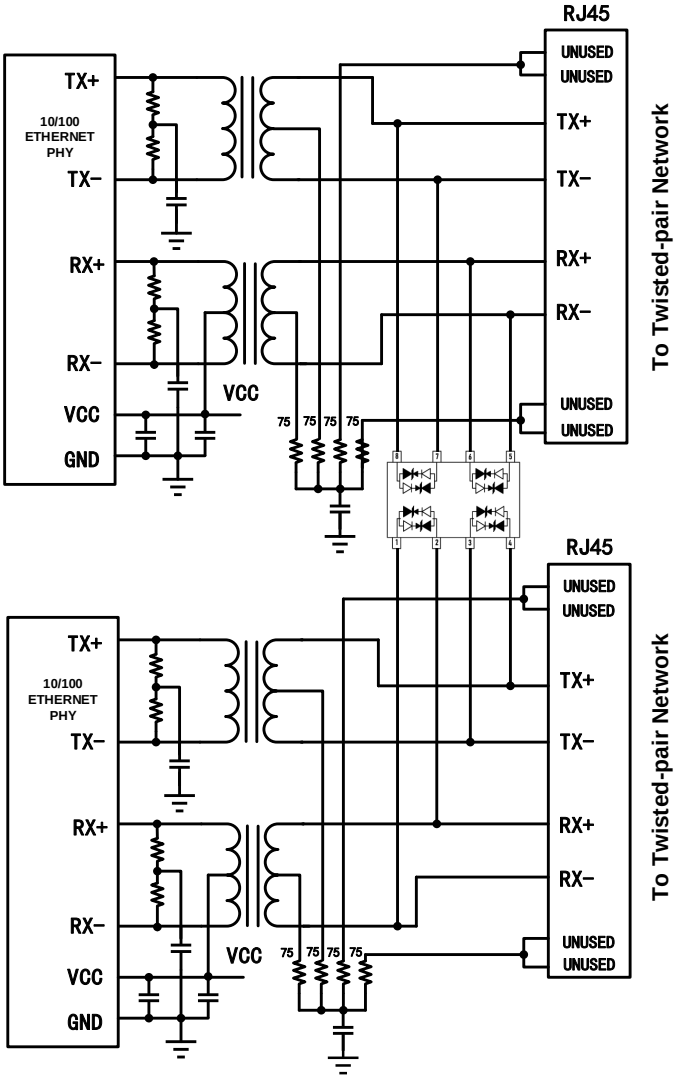

BORN SEMICONDUCTOR , INC. ALL RIGHT RESERVED

BSLVU2.8-8

ESD Protection Diode

Outline Drawing – SOP8

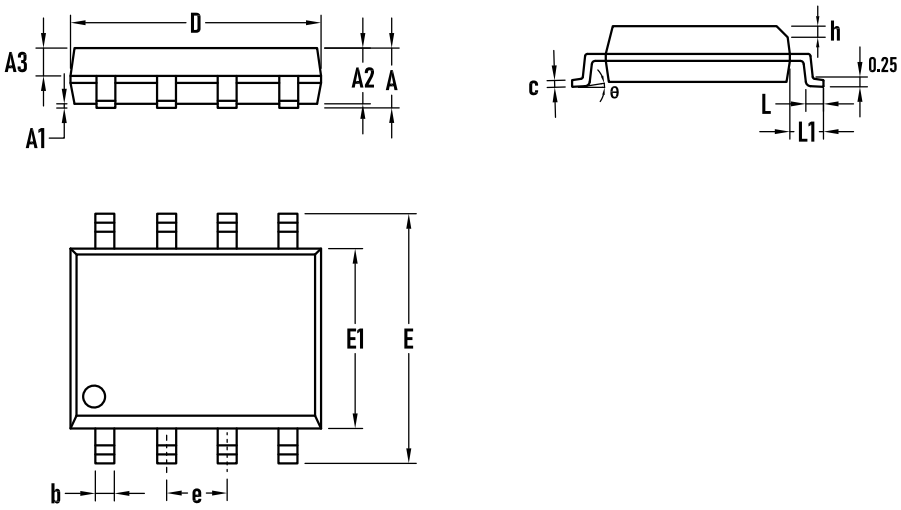

SYMBOL	mm.		
	MIN.	TYP.	MAX.
A	1.50	1.65	1.80
A1	0.01	0.15	0.20
A2	1.35	1.45	1.55
A3	0.60	0.70	0.80
b	0.30	0.40	0.50
c	0.15	0.20	0.25
D	4.70	4.90	5.10
E	5.70	6.00	6.30
E1	3.80	3.90	4.00
e	1.27BSC		
h	0.25	–	0.50
L	0.40	0.65	0.85
L1	0.80	1.05	1.20
θ	0 °	4°	8 °

Packaging Tape - SOP8

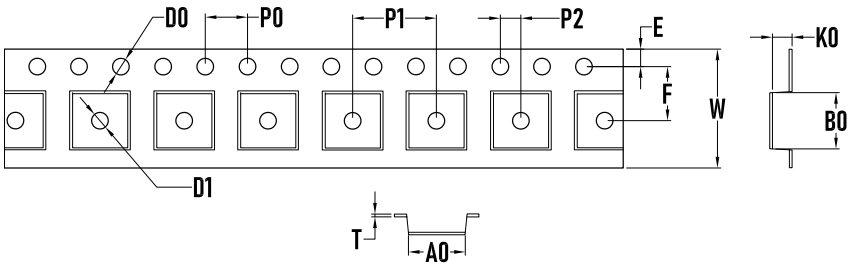

SYMBOL	MILLIMETER
A0	6.50±0.10
B0	5.35±0.10
D0	1.60±0.10
D1	1.60±0.10
E	1.75±0.10
F	5.50±0.10
K0	2.10±0.10
P0	4.00±0.10
P1	8.00±0.10
P2	2.00±0.10
W	12.00±0.10
T	0.20±0.02

Packaging Reel

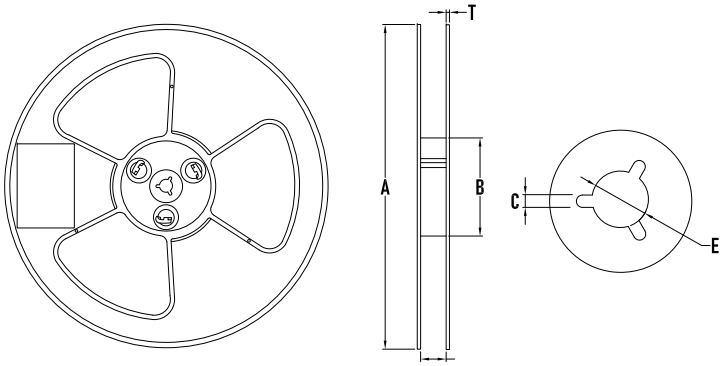

SYMBOL	MILLIMETER
A	330±1
B	100±0.5
C	2.7±0.2
T	2.0±0.2
E	13.60
W	12.4±0.2
Quantity	3000PCS

BORN SEMICONDUCTOR , INC. ALL RIGHT RESERVED

Specifications are subject to change without notice.
Please refer to http://*www.born-tw.com* for current information.

Revision: 2022-Jan-1-A