BORN SEMICONDUCTOR

RCLAMP3324P-N

ESD Protection Diode Array

Features

- 25Watts peak pulse power (tp = 8/20μs)
- Unidirectional configurations
- Solid-state silicon-avalanche technology
- Low clamping Voltage
- Low leakage current
- Low capacitance (C_j=0.3pF typ.I/O to I/O)
- Protection one data/power line
- IEC 61000-4-2 ±10kV contact ; ±12kV air
- Low clamping voltage:V_{CL}= 5.3V typ @ I_{PP} =16A (TLP)
- IEC 61000-4-5 (Lightning) 5A (8/20μs)

Package

DFN10L(2.5mmx1.0mm)

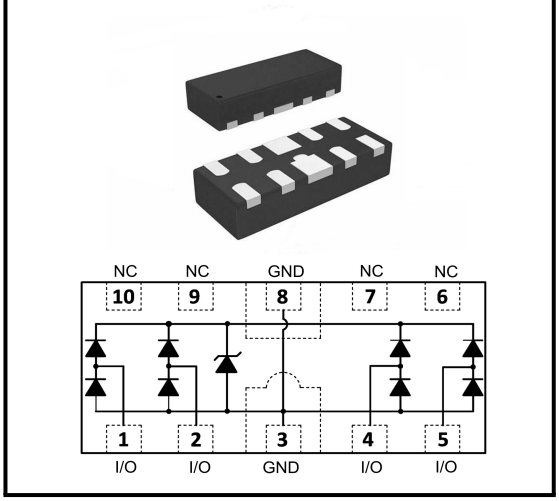

Applications

- USB 3.0, USB3.1
- HDMI1.3,HDMI1.4 and HDMI2.0
- Very sensitive interface lines
- Notebooks, Desktops, and Servers
- Industrial equipment

Mechanical Data

- Tiny DFN10L(2.5mmx1.0mm) package
- Molding compound flammability rating: UL 94V-0
- Packaging: Tape and Reel
- RoHS/WEEE Compliant

Marking



Ordering information

Order code	Package	Base qty	Delivery mode
RCLAMP3324P-N	DFN10L(2.5mmx1.0mm)	3k	Tape and reel

BORN SEMICONDUCTOR , INC. ALL RIGHT RESERVED

Specifications are subject to change without notice.
Please refer to http://*www.born-tw.com* for current information.

Revision: 2022-Jan-1-A

RCLAMP3324P-N

ESD Protection Diode Array

Electrical Parameters (T_A = 25°C unless otherwise noted)

Symbol	Parameter
I_{PP}	Maximum Reverse Peak Pulse Current
V_C	Clamping Voltage @ I_{PP}
V_{RWM}	Peak Reverse Working Voltage
I_R	Reverse Leakage Current @ V_{RWM}
V_{BR}	Revers Breakdown Voltage
V_T	Trigger Voltage
I_H	Holding Current
V_H	Holding Voltage

Note:8/20us pulse Waveform.

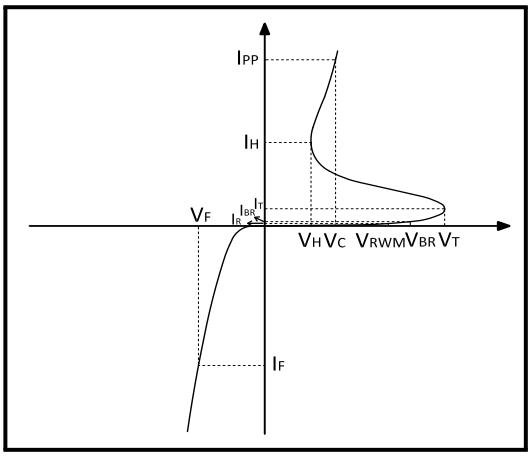

Absolute Maximum Rating

Rating	Symber	Value	Units
Peak Pulse Power (tp =8/20μs)	P_{PP}	25	Watts
Peak Pulse Current (tp =8/20μs)	I_{PP}	5	A
ESD per IEC 61000-4-2 (Air) ESD per IEC 61000-4-2 (Contact)	V_{ESD}	12 10	KV
Lead Soldering Temperature	T_L	260(10seconds)	°C
Junction Temperature	T_J	-55 to + 150	°C
Storage Temperature	T_{stg}	-55 to + 150	°C

Electrical Characteristics

Parameter	Symber	Conditions	Min	Typical	Max	Units
Reverse Stand-Off Voltage	V_{RWM}	–	–	–	3.3	V
Holding Voltage	V_H	I_T=1mA	2.0	–	3.3	V
Reverse Leakage Current	I_R	V_{RWM}=3.3V,T=25°C	–	–	0.5	uA
Trigger Voltage	V_T	–	–	8.0	–	V
Clamping Voltage	V_{CL}	I_{PP}=16A, tp =100ns	–	5.3	6	V
Clamping Voltage	V_C	I_{PP}=5A, tp =8/20us	–	4	5	V
dynamic resistance	R_{dyn}	T_{amd}=25°C,I_R=10A	–	0.3	0.4	Ω
Junction Capacitance	C_j	V_R=0V,f=1MHZ,I/O to I/O	–	0.3	–	pF
		V_R=0V,f=1MHZ,I/O to GND	–	0.55	–	

BORN SEMICONDUCTOR , INC. ALL RIGHT RESERVED

Specifications are subject to change without notice.
Please refer to http://*www.born-tw.com* for current information.

RCLAMP3324P-N

ESD Protection Diode Array

Typical Characteristics

Figure 1: Clamping Voltage vs. IPP

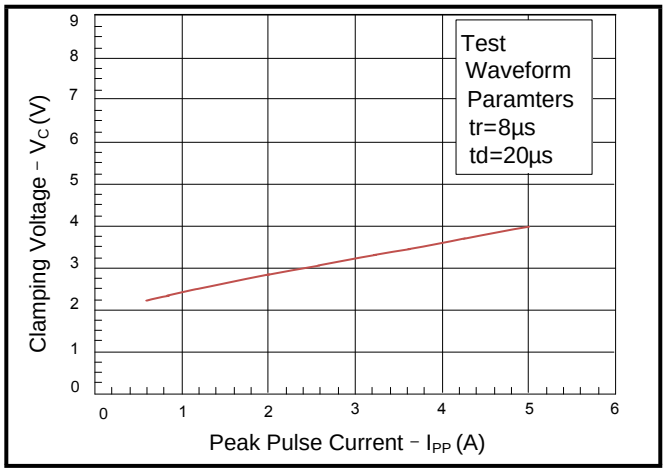

Figure 2: Peak Pluse Power vs. Pluse Time

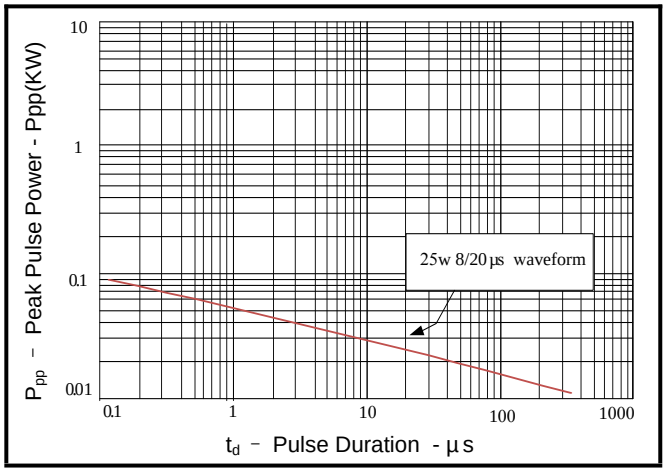

Figure 3: Positive Clamping voltage (TLP)

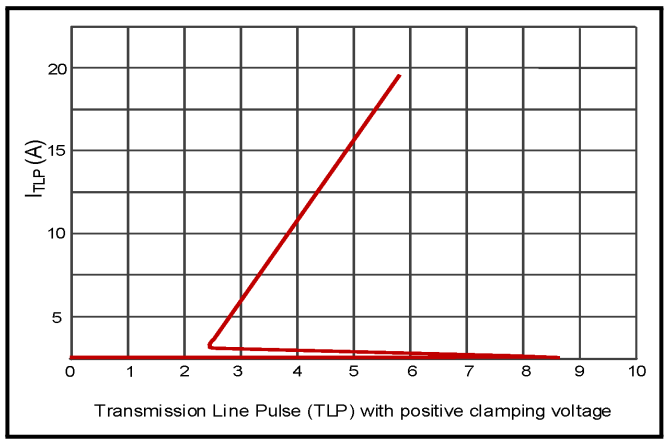

Figure 4: Capacitance vs. Reverse Voltage

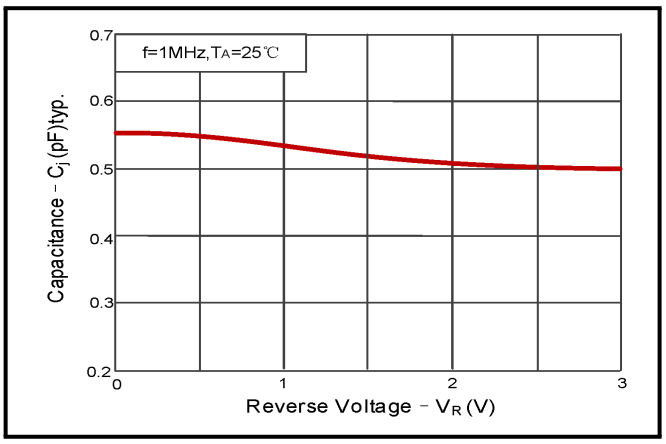

Figure 5: IEC61000-4-2 : 8 kV positive pulse(I/O to GND)

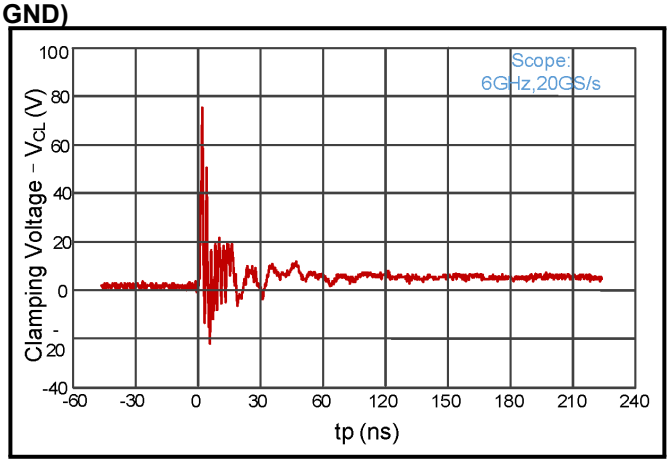

Figure 6: IEC61000-4-2 : 8 kV positive pulse(GND to I/O)

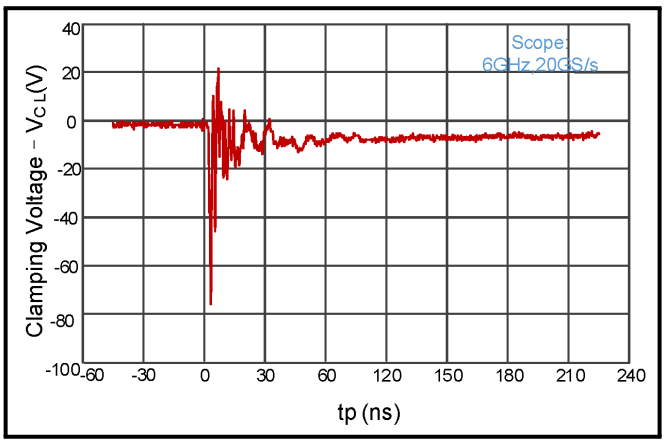

BORN SEMICONDUCTOR , INC. ALL RIGHT RESERVED

Specifications are subject to change without notice.
Please refer to http://www.born-tw.com for current information.

RCLAMP3324P-N

ESD Protection Diode Array

Outline Drawing – DFN10L(2.5mmx1.0mm)

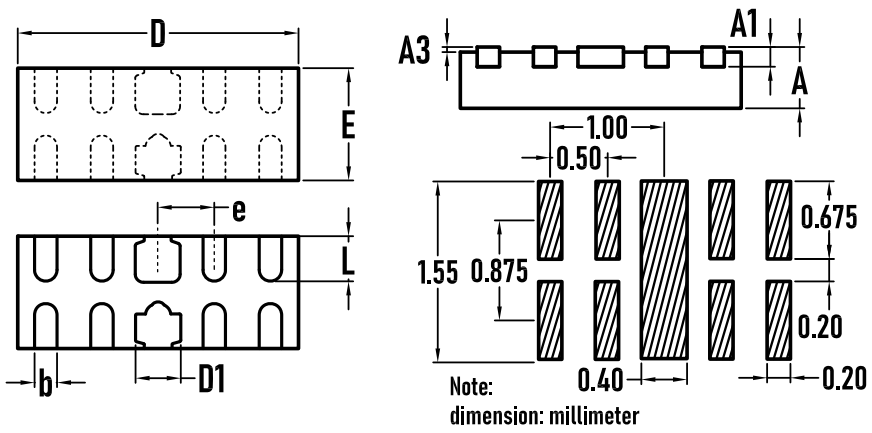

SYMBOL	MILLIMETER		
	MIN.	Typ.	MAX.
A	0.45	0.50	0.55
A3	–	0.02	0.05
A1	0.10	0.15	0.20
D	2.45	2.50	2.55
E	0.95	1.00	1.05
D1	0.35	0.40	0.45
b	0.15	0.20	0.25
e	0.50BSC		
L	0.35	0.40	0.45

Packaging Tape - DFN2510-10L

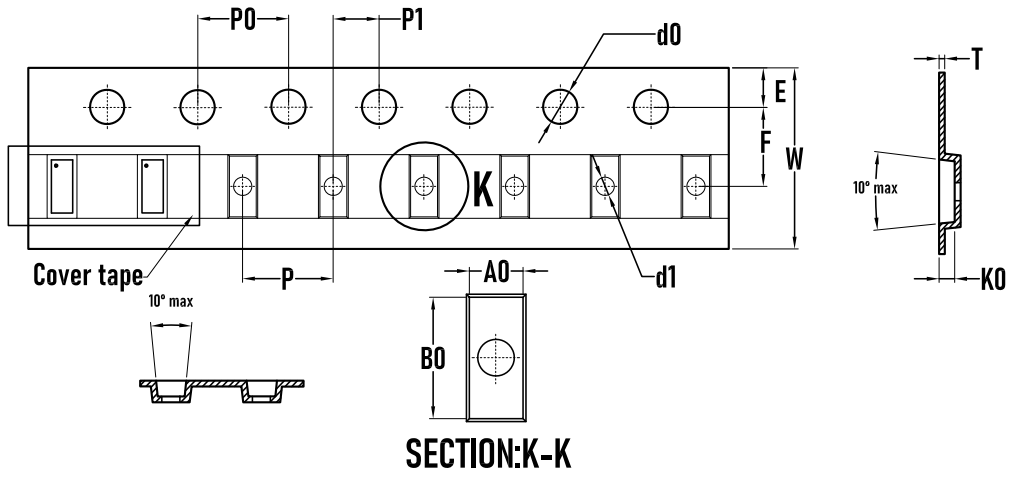

SYMBOL	MILLIMETER
A0	1.2±0.05
B0	2.7±0.05
d0	$1.5^{+0.1}_{-0}$
d1	0.8±0.1
E	1.75±0.10
F	3.50±0.05
K0	0.7±0.05
P	4.00±0.05
P0	4.00±0.05
P1	8.00±0.05
W	$8.00^{+0.03}_{-0.01}$
T	0.22±0.03

Packaging Reel

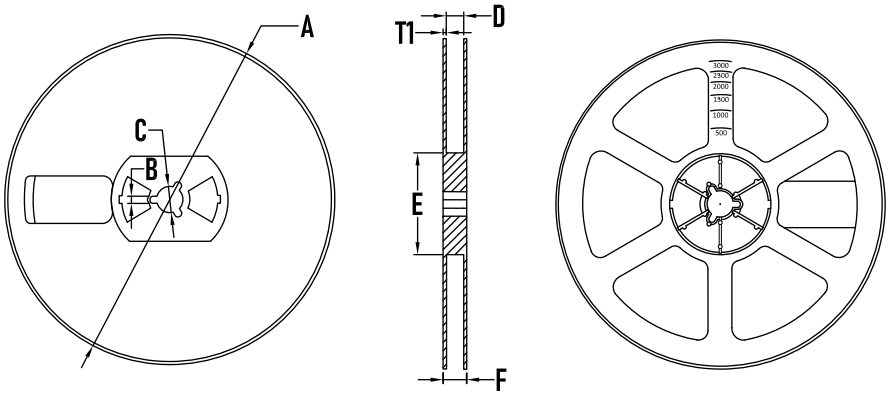

SYMBOL	MILLIMETER
A	178±1
B	3.5±0.2
C	14.3±0.2
D	9.8^{+2}_{-1}
E	54.5±0.5
F	12.4±0.5
T1	1.0±0.2
Quantity	3000PCS

BORN SEMICONDUCTOR , INC. ALL RIGHT RESERVED

Specifications are subject to change without notice.
Please refer to http://*www.born-tw.com* for current information.

Revision: 2022-Jan-1-A