BORN SEMICONDUCTOR

IP4283CZ10-TBA-N

ESD Protection Diode Array

Features

- 52Watts peak pulse power (tp = 8/20μs)
- Unidirectional configurations
- Solid-state silicon-avalanche technology
- Low clamping Voltage
- Low leakage current
- Low capacitance (C_j=0.25pF typ.I/O to GND)
- Protection one data/power line
- IEC 61000-4-2 ±15kV contact ; ±20kV air
- IEC 61000-4-4 (EFT) 40A (5/50ns)
- IEC 61000-4-5 (Lightning) 3.5A (8/20μs)

Package

DFN10L(2.5mmx1.0mm)

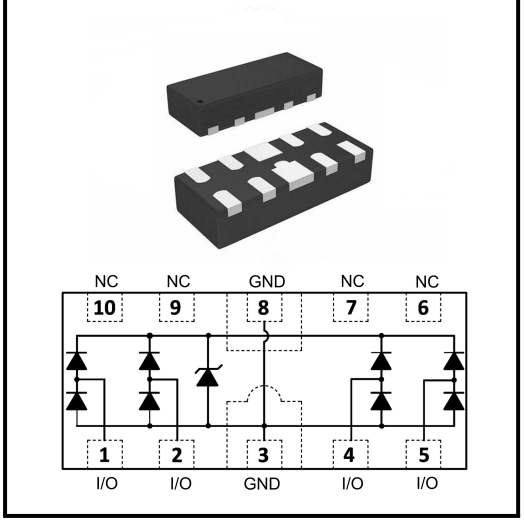

Applications

- USB3.0, USB2.0,Ethernet
- HDMI 2.0, Displayport 1.3,eSATA
- Unified Display interface
- Digital Visual Interface
- High speed serial interface

Mechanical Data

- Tiny DFN10L(2.5mmx1.0mm) package
- Molding compound flammability rating: UL 94V-0
- Packaging: Tape and Reel
- RoHS/WEEE Compliant

Marking

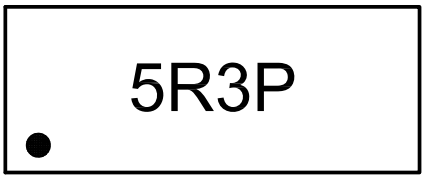

Ordering information

Order code	Package	Base qty	Delivery mode
IP4283CZ10-TBA-N	DFN10L(2.5mmx1.0mm)	3k	Tape and reel

BORN SEMICONDUCTOR , INC. ALL RIGHT RESERVED

Specifications are subject to change without notice.
Please refer to http://*www.born-tw.com* for current information.

Revision: 2022-Jan-1-A

IP4283CZ10-TBA-N

ESD Protection Diode Array

Electrical Parameters (T_A = 25°C unless otherwise noted)

Symbol	Parameter
I_{PP}	Maximum Reverse Peak Pulse Current
V_C	Clamping Voltage @ I_{PP}
V_{RWM}	Peak Reverse Working Voltage
I_R	Reverse Leakage Current @ V_{RWM}
V_{BR}	Breakdown Voltage @ I_T
I_T	Test Current

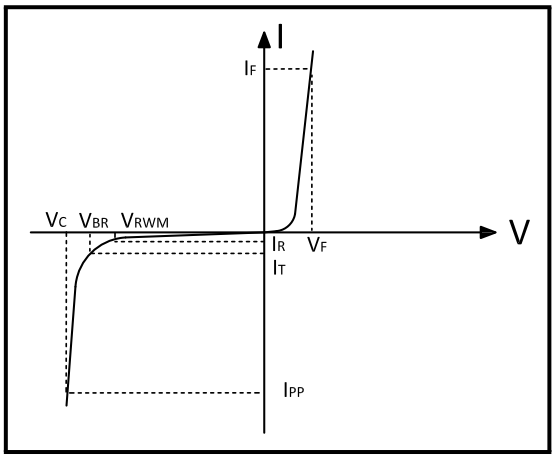

Note:8/20us pulse Waveform.

Absolute Maximum Rating

Rating	Symber	Value	Units
Peak Pulse Power (tp =8/20μs)	P_{PP}	52	Watts
Peak Pulse Current (tp =8/20μs)	I_{PP}	3.5	A
ESD per IEC 61000-4-2 (Air) ESD per IEC 61000-4-2 (Contact)	V_{ESD}	20 15	KV
Lead Soldering Temperature	T_L	260(10seconds)	°C
Junction Temperature	T_J	-55 to + 150	°C
Storage Temperature	T_{stg}	-55 to + 150	°C

Electrical Characteristics

Parameter	Symber	Conditions	Min	Typical	Max	Units
Reverse Stand-Off Voltage	V_{RWM}	–	–	–	5.0	V
Reverse Breakdown Voltage	V_{BR}	I_T=1mA	6.0	7.8	9.5	V
Reverse Leakage Current	I_R	V_{RWM}=5V,T=25°C	–	–	0.5	uA
Peak Pulse Current	I_{PP}	tp =8/20us	–	–	3.5	A
Clamping Voltage	V_C	I_{PP}=3.5A, tp =8/20us	–	12	15	V
Junction Capacitance	C_j	V_R=0V,f=1MHZ,I/O to I/O	–	0.18	0.35	pF
		V_R=0V,f=1MHZ,I/O to GND	–	0.25	0.4	

BORN SEMICONDUCTOR , INC. ALL RIGHT RESERVED

Specifications are subject to change without notice.
Please refer to http://*www.born-tw.com* for current information.

Typical Characteristics

Figure 1: Peak Pulse Power vs. Pulse Time

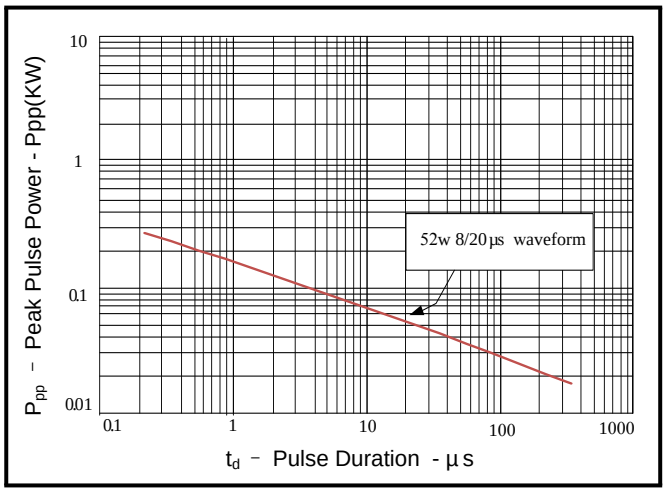

Figure 2: Power Derating Curve

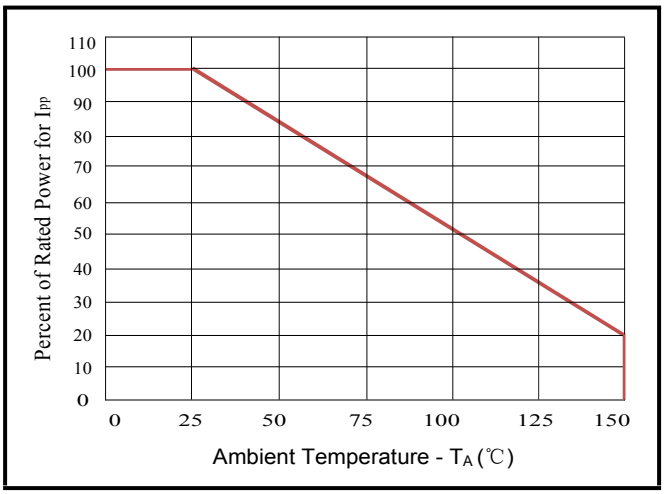

Figure 3: Pulse Waveform

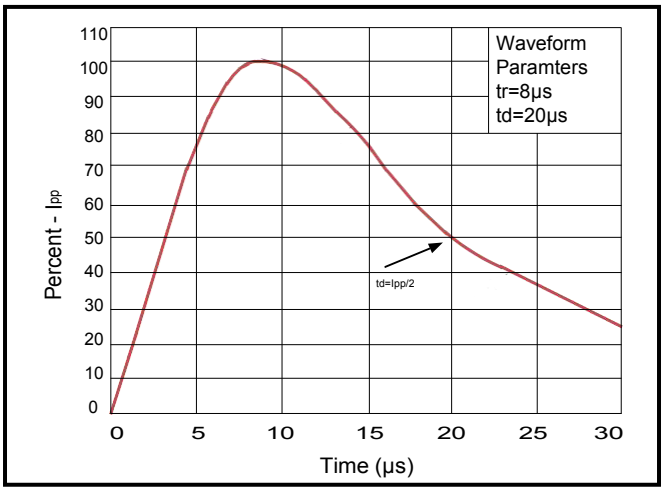

Figure 4: Clamping Voltage vs. I_{PP}

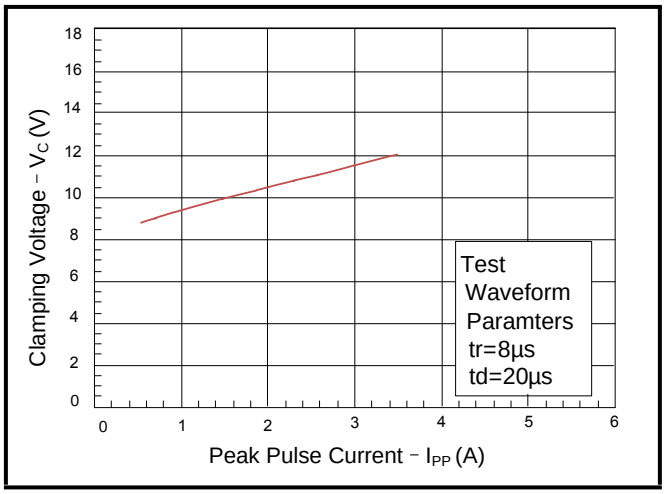

BORN SEMICONDUCTOR , INC. ALL RIGHT RESERVED

Specifications are subject to change without notice.
Please refer to http://*www.born-tw.com* for current information.

IP4283CZ10-TBA-N

ESD Protection Diode Array

Outline Drawing – DFN10L(2.5mmx1.0mm)

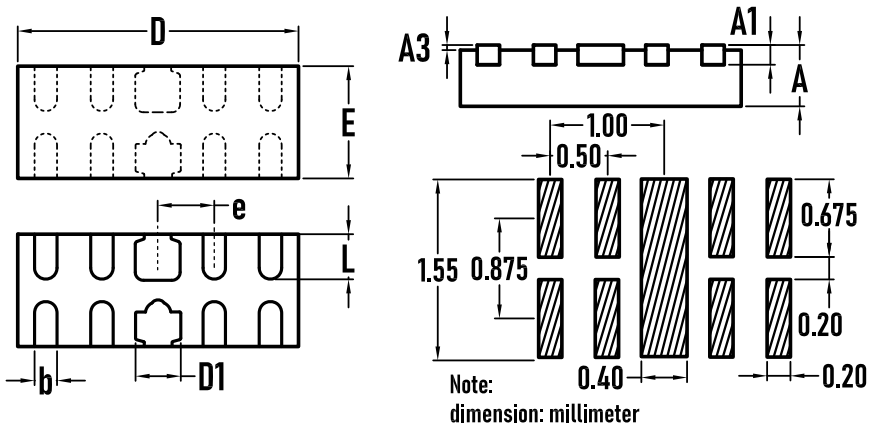

SYMBOL	MILLIMETER		
	MIN.	Typ.	MAX.
A	0.45	0.50	0.55
A3	–	0.02	0.05
A1	0.10	0.15	0.20
D	2.45	2.50	2.55
E	0.95	1.00	1.05
D1	0.35	0.40	0.45
b	0.15	0.20	0.25
e	0.50BSC		
L	0.35	0.40	0.45

Packaging Tape - DFN2510-10L

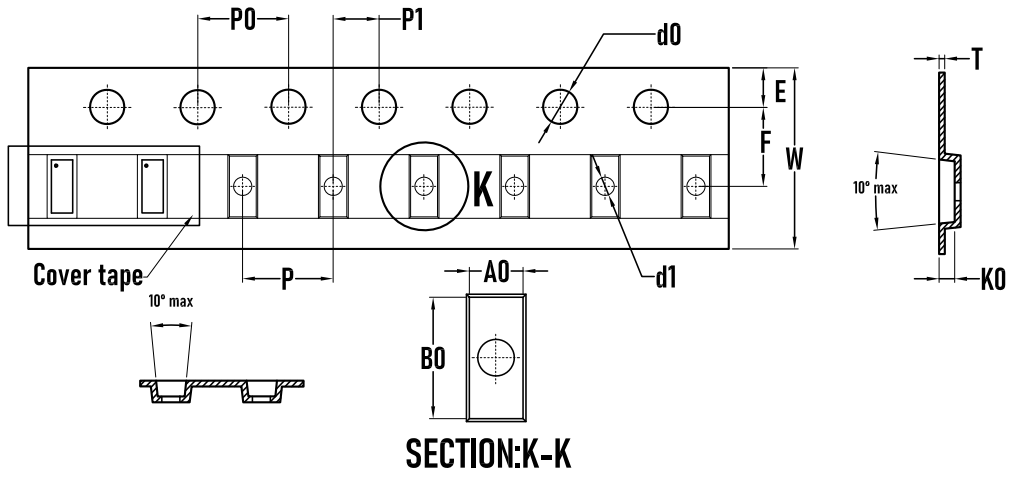

SYMBOL	MILLIMETER
A0	1.2±0.05
B0	2.7±0.05
d0	$1.5^{+0.1}_{-0}$
d1	0.8±0.1
E	1.75±0.10
F	3.50±0.05
K0	0.7±0.05
P	4.00±0.05
P0	4.00±0.05
P1	8.00±0.05
W	$8.00^{+0.03}_{-0.01}$
T	0.22±0.03

Packaging Reel

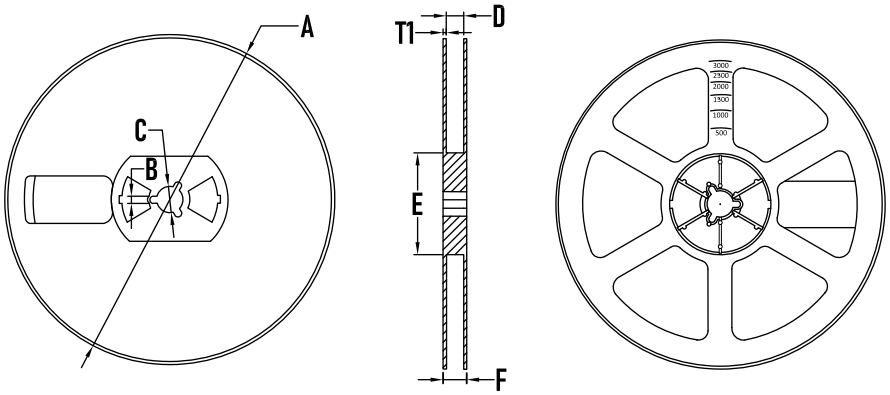

SYMBOL	MILLIMETER
A	178±1
B	3.5±0.2
C	14.3±0.2
D	9.8^{+2}_{-1}
E	54.5±0.5
F	12.4±0.5
T1	1.0±0.2
Quantity	3000PCS

BORN SEMICONDUCTOR , INC. ALL RIGHT RESERVED

Specifications are subject to change without notice.
Please refer to http://*www.born-tw.com* for current information.

Revision: 2022-Jan-1-A