BORN SEMICONDUCTOR

NUP4114UPXV6T1G-N

ESD Protection Diode

Features

- 70Watts peak pulse power (tp = 8/20μs)
- Solid-state silicon-avalanche technology
- Low clamping Voltage
- Low leakage current
- Low capacitance (Cj=0.25 pF typ IO/IO.)
- Protection one data/power line
- IEC 61000-4-2 ±15kV contact ; ±20kV air
- IEC 61000-4-4 (EFT) 40A (5/50ns)
- IEC 61000-4-5 (Lightning) 4.0A (8/20μs)

Package

SOT-563

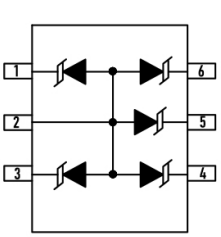

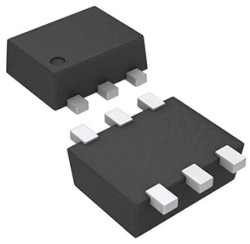

Applications

- Ethernet
- Digital Visual Interface (DVI)
- USB2.0
- Notebook and PC Computers

Mechanical Characteristics

- SOT563 package
- Molding compound flammability rating: UL 94V-0
- Packaging: Tape and Reel
- RoHS/WEEE Compliant

Marking

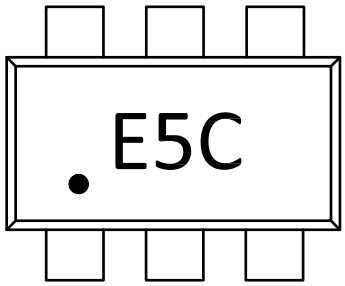

Ordering information

Order code	Package	Base qty	Delivery mode
NUP4114UPXV6T1G-N	SOT-563	3k	Tape and reel

BORN SEMICONDUCTOR , INC. ALL RIGHT RESERVED

Specifications are subject to change without notice.
Please refer to http://*www.born-tw.com* for current information.

Revision: 2022-Jan-1-A

NUP4114UPXV6T1G-N

ESD Protection Diode

Electrical Parameters (T_A = 25°C unless otherwise noted)

Symbol	Parameter
I_{PP}	Maximum Reverse Peak Pulse Current
V_C	Clamping Voltage @ I_{PP}
V_{RWM}	Peak Reverse Working Voltage
I_R	Reverse Leakage Current @ V_{RWM}
V_{BR}	Breakdown Voltage @ I_T
I_T	Test Current

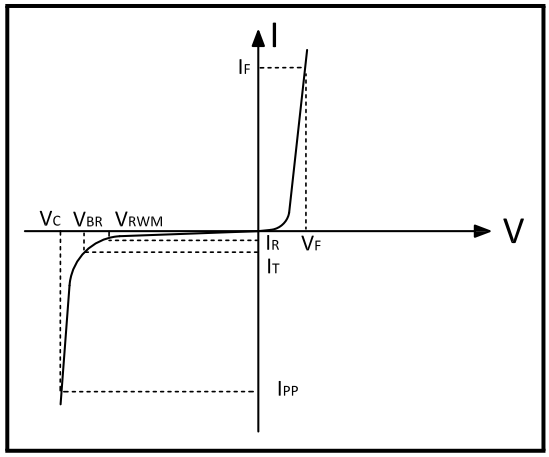

Note:8/20us pulse Waveform.

Absolute Maximum Rating

Rating	Symber	Value	Units
Peak Pulse Power (tp =8/20μs)	P_{PP}	70	Watts
Peak Pulse Current (tp =8/20μs)	I_{PP}	4.0	A
ESD per IEC 61000-4-2 (Air) ESD per IEC 61000-4-2 (Contact)	V_{ESD}	20 15	KV
Lead Soldering Temperature	T_L	260(10seconds)	°C
Junction Temperature	T_J	-55 to + 150	°C
Storage Temperature	T_{stg}	-55 to + 150	°C

Electrical Characteristics

Parameter	Symber	Conditions	Min	Typical	Max	Units
Reverse Stand-Off Voltage	V_{RWM}	–	–	–	5.0	V
Reverse Breakdown Voltage	V_{BR}	I_T=1mA	6	7.2	9.5	V
Reverse Leakage Current	I_R	V_{RWM}=5V,T=25°C	–	–	0.2	uA
Peak Pulse Current	I_{PP}	tp =8/20us	–	–	4.0	A
Clamping Voltage	V_C	I_{PP}=4.0A, tp =8/20us	–	14	17	V
Junction Capacitance	C_j	V_R=0V,f=1MHZ,IO to IO	–	0.25	0.35	pF
Junction Capacitance	C_j	V_R=0V,f=1MHZ,IO to GND	–	0.5	0.7	pF

BORN SEMICONDUCTOR , INC. ALL RIGHT RESERVED

Specifications are subject to change without notice.
Please refer to http://*www.born-tw.com* for current information.

NUP4114UPXV6T1G-N

ESD Protection Diode

Typical Characteristics

Figure 1: Peak Pulse Power vs. Pulse Time

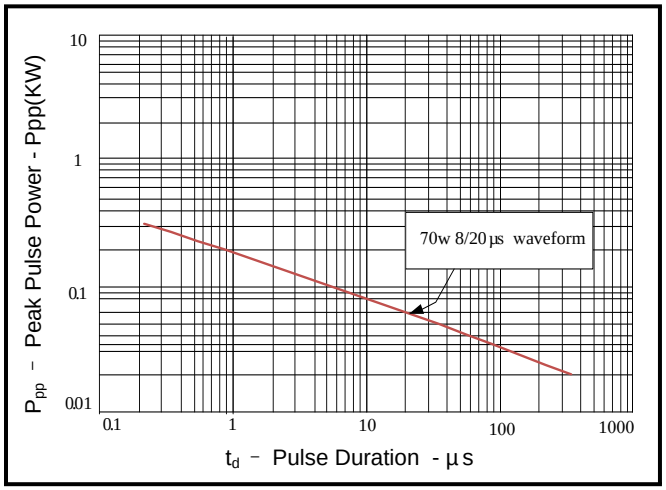

Figure 2: Power Derating Curve

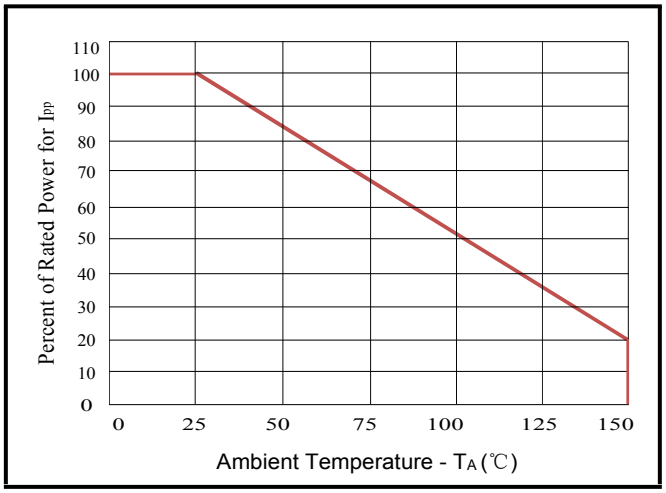

Figure 3: Pulse Waveform

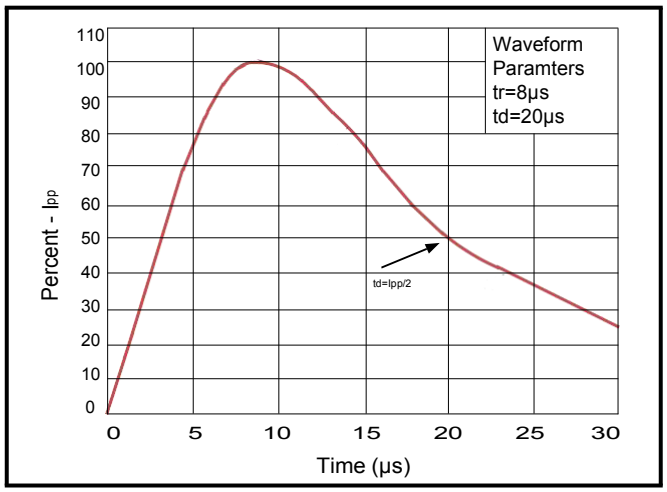

Figure 4: Clamping Voltage vs. I_{PP}

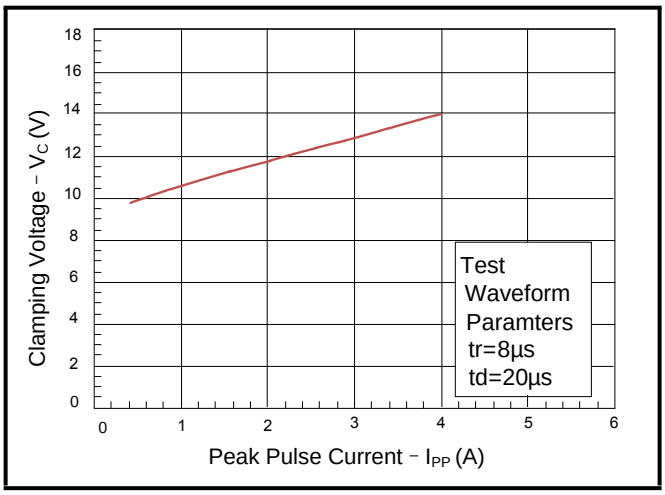

BORN SEMICONDUCTOR , INC. ALL RIGHT RESERVED

NUP4114UPXV6T1G-N

ESD Protection Diode

Outline Drawing – SOT-563

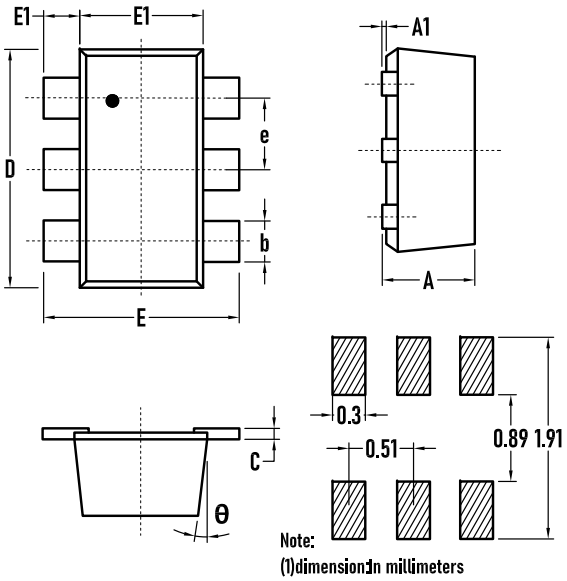

SYMBOL	MILLIMETER		Inches	
	MIN	MAX	MIN	MAX
A	0.525	0.600	0.021	0.024
A1	0.000	0.050	0.000	0.002
e	0.450	0.550	0.018	0.022
C	0.090	0.160	0.004	0.006
D	1.500	1.700	0.059	0.067
b	0.170	0.270	0.007	0.011
E	1.500	1.700	0.059	0.067
E1	1.100	1.300	0.043	0.051
L	0.100	0.300	0.004	0.012
θ	0°	7°	0°	7°

Packaging Tape - SOT-563

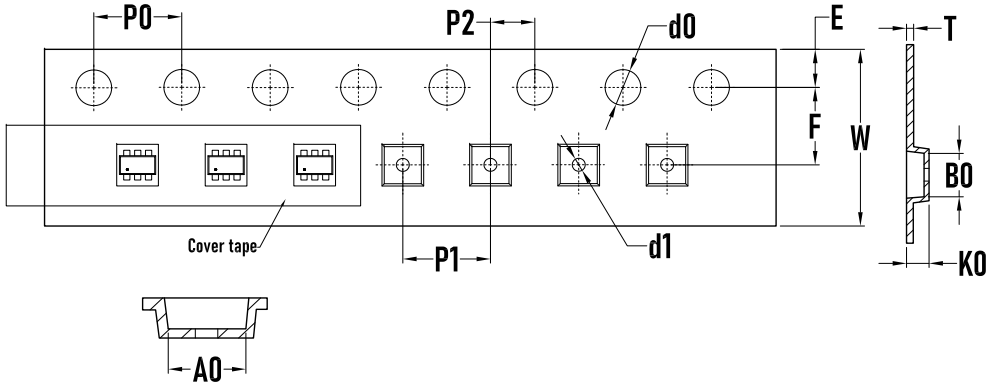

SYMBOL	MILLIMETER
A0	3.25±0.1
B0	3.3±0.1
d0	1.55±0.1
d1	1.0±0.1
E	1.75±0.1
F	3.50±0.1
K0	1.38±0.1
P	4.00±0.1
P0	4.00±0.1
P1	2.00±0.1
W	8.00±0.2
T	0.2±0.02

Packaging Reel

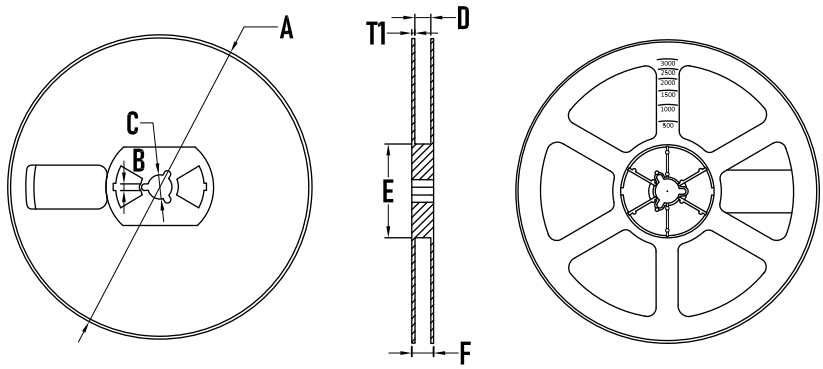

SYMBOL	MILLIMETER
A	177.8±0.2
B	2.7±0.2
C	13.5±0.2
D	9.6±0.3
E	54.5±0.2
F	12.3±0.3
T1	1.0±0.2
Quantity	3000PCS

BORN SEMICONDUCTOR , INC. ALL RIGHT RESERVED

Specifications are subject to change without notice.
Please refer to http://*www.born-tw.com* for current information.

Revision: 2022-Jan-1-A