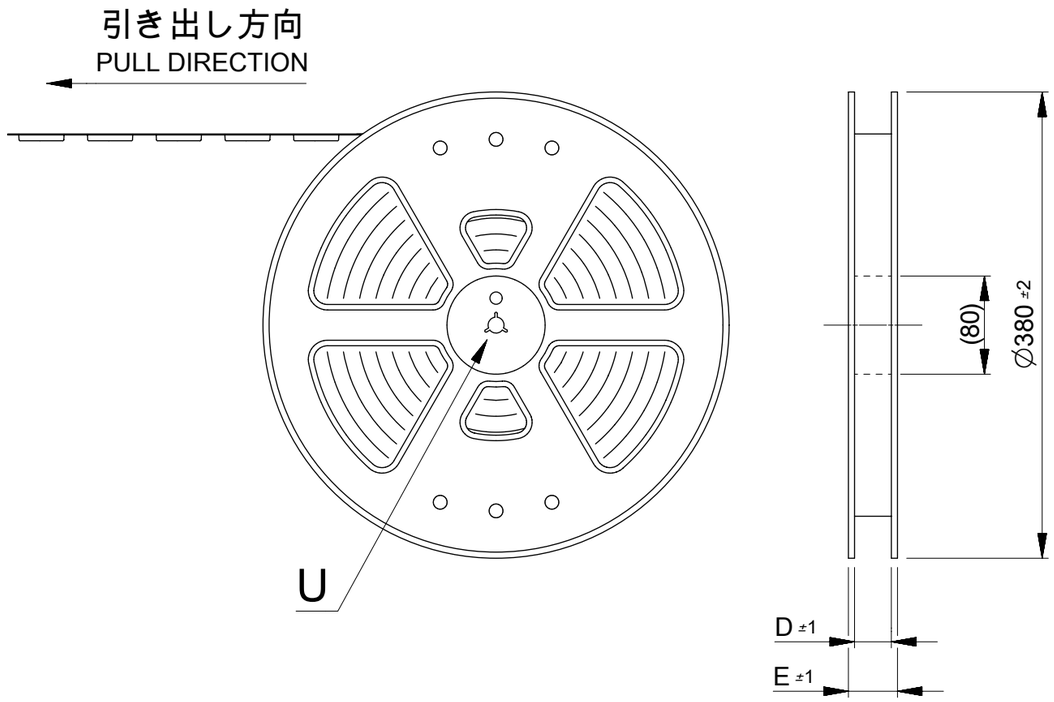

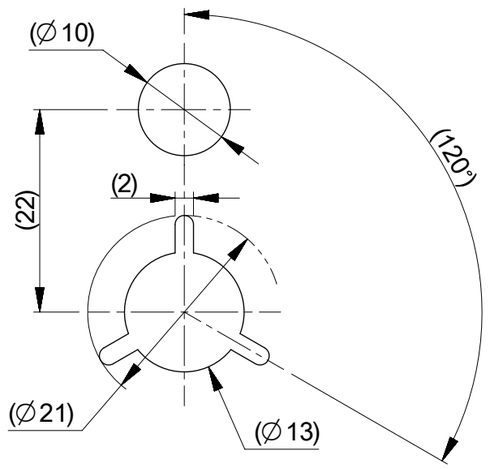

DETAIL U

NOTES

1. 梱包数量： 3000個 / リール
   NUMBER OF CONNECTORS : 3000 PCS/REEL.

2. リードテープ長さ
   LEAD TAPE LENGTH

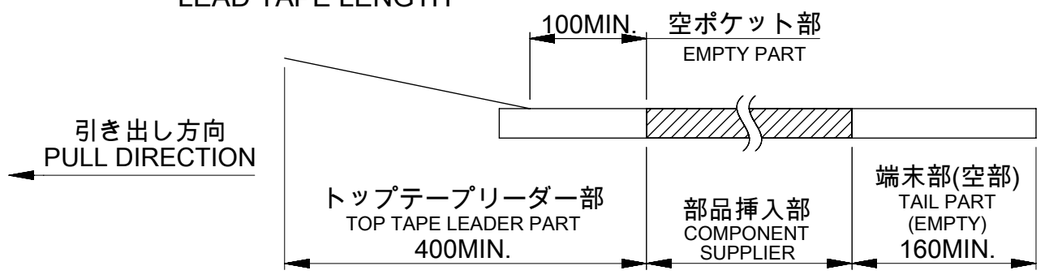

3. カバーテープの剥離強度については、IEC60286-3に準拠。
   COVER TAPE PEEL FORCE IS DEFINED BY IEC 60286-3.

4. 製品詳細寸法については、図面 5051101008-SD を参照下さい。
   DIMENTIONS OF PRODUCT, REFER TO 5051101008-SD.

5. 材料　MATERIAL
   キャリアテープ : ポリスチレン
   トップテープ　 : ポリエチレンテレフタレート、ポリエチレン
   リール　　 : ポリスチレン < リサイクル材を含む >
   CARRIER TAPE : POLYSTYRENE
   TOP TAPE : POLYETHYLENE TEREHTHALATE, POLYETHYLENE
   REEL : POLYSTYRENE < RECYCLE MATERIAL CONTAINED >

THIS DRAWING CONTAINS INFORMATION THAT IS PROPRIETARY TO MOLEX ELECTRONIC TECHNOLOGIES, LLC AND SHOULD NOT BE USED WITHOUT WRITTEN PERMISSION

DIMENSION UNITS	SCALE
mm	2:1

GENERAL TOLERANCES (UNLESS SPECIFIED)		
ANGULAR TOL	±	3.0 °
4 PLACES	±	0.2
3 PLACES	±	0.2
2 PLACES	±	0.2
1 PLACE	±	0.25
0 PLACES	±	0.3

DRAFT WHERE APPLICABLE MUST REMAIN WITHIN DIMENSIONS

CURRENT REV DESC:

EC NO: 605617
DRWN: JASANUMA 2018/10/05
CHK'D: TRSUZUKI 2018/10/10
APPR: RTAKEUCHI 2018/10/10

INITIAL REVISION:
DRWN: JASANUMA 2018/10/05
APPR: RTAKEUCHI 2018/10/10

molex

0.5 FPC ZIF 2 CONT EMBT PKG

PRODUCT CUSTOMER DRAWING

DOCUMENT NUMBER	DOC TYPE	DOC PART	REVISION
5051100008-SD	PSD	000	A

THIRD ANGLE PROJECTION	DRAWING	SERIES	MATERIAL NUMBER	CUSTOMER	SHEET NUMBER
	A3-SIZE	505110	SEE CHART		1 OF 3

DOCUMENT STATUS	P1	RELEASE DATE	2018/10/10 01:08:21

FORMAT: master-tb-prod-A3
REVISION: H
DATE: 2018/01/18

引き出し方向
PULL DIRECTION

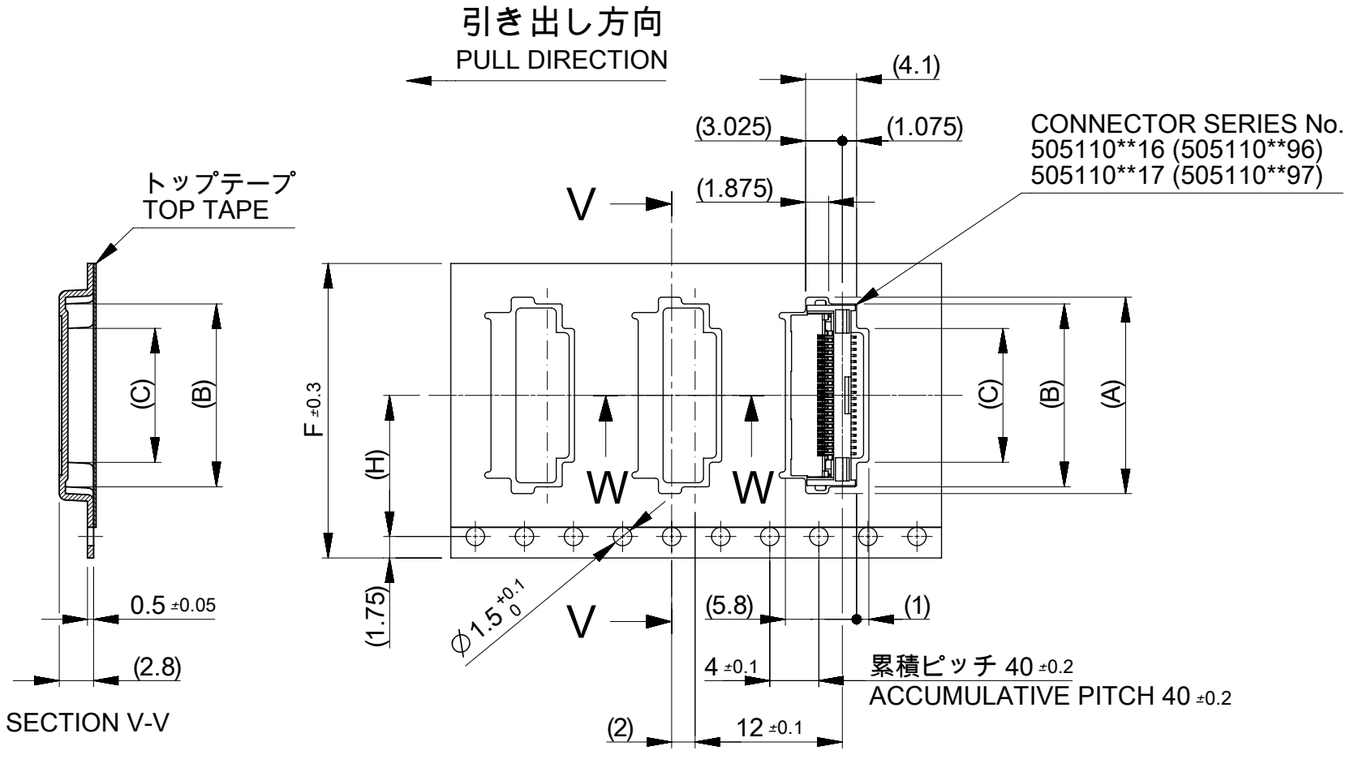

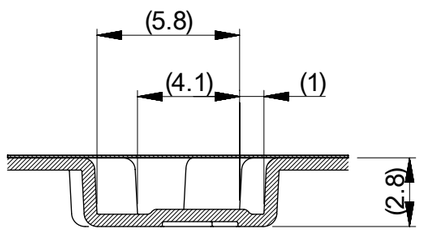

SECTION W-W
SCALE 4:1

					10.9	14.9	16	5051102096	20
					10.4	14.4	15.5	5051101997	19
					9.9	13.9	15	5051101897	18
					9.4	13.4	14.5	5051101797	17
					8.9	12.9	14	5051101697	16
					8.4	12.4	13.5	5051101597	15
					7.9	11.9	13	5051101497	14
					7.4	11.4	12.5	5051101397	13
11.5	----	24	29.4	25.4	6.9	10.9	12	5051101297	12
					6.4	10.4	11.5	5051101197	11
					5.9	9.9	11	5051101097	10
					5.4	9.4	10.5	5051100997	9
					4.9	8.9	10	5051100897	8
					4.4	8.4	9.5	5051100797	7
					3.9	7.9	9	5051100697	6
					3.4	7.4	8.5	5051100597	5
7.5	----	16	21.4	17.4	2.9	6.9	8	5051100497	4
H	G	F	E	D	C	B	A	EMBOSSED PACKAGE オーダー番号 ORDER No.	Ckt

THIS DRAWING CONTAINS INFORMATION THAT IS PROPRIETARY TO MOLEX ELECTRONIC TECHNOLOGIES, LLC AND SHOULD NOT BE USED WITHOUT WRITTEN PERMISSION

DIMENSION UNITS	mm
SCALE	2:1
GENERAL TOLERANCES (UNLESS SPECIFIED)	
ANGULAR TOL	± 3.0 °
4 PLACES	± 0.2
3 PLACES	± 0.2
2 PLACES	± 0.2
1 PLACE	± 0.25
0 PLACES	± 0.3
DRAFT WHERE APPLICABLE MUST REMAIN WITHIN DIMENSIONS	

CURRENT REV DESC:

EC NO: 605617
DRWN: JASANUMA 2018/10/05
CHK'D: TRSUZUKI 2018/10/10
APPR: RTAKEUCHI 2018/10/10

INITIAL REVISION:
DRWN: JASANUMA 2018/10/05
APPR: RTAKEUCHI 2018/10/10

molex

0.5 FPC ZIF 2 CONT EMBT PKG

PRODUCT CUSTOMER DRAWING

DOCUMENT NUMBER	DOC TYPE	DOC PART	REVISION
5051100008-SD	PSD	000	A

THIRD ANGLE PROJECTION	DRAWING	SERIES	MATERIAL NUMBER	CUSTOMER	SHEET NUMBER
	A3-SIZE	505110	SEE CHART		2 OF 3

DOCUMENT STATUS	P1	RELEASE DATE	2018/10/10 01:08:21

FORMAT: tb-prod-A3
REVISION: H
DATE: 2018/01/18

引き出し方向
PULL DIRECTION

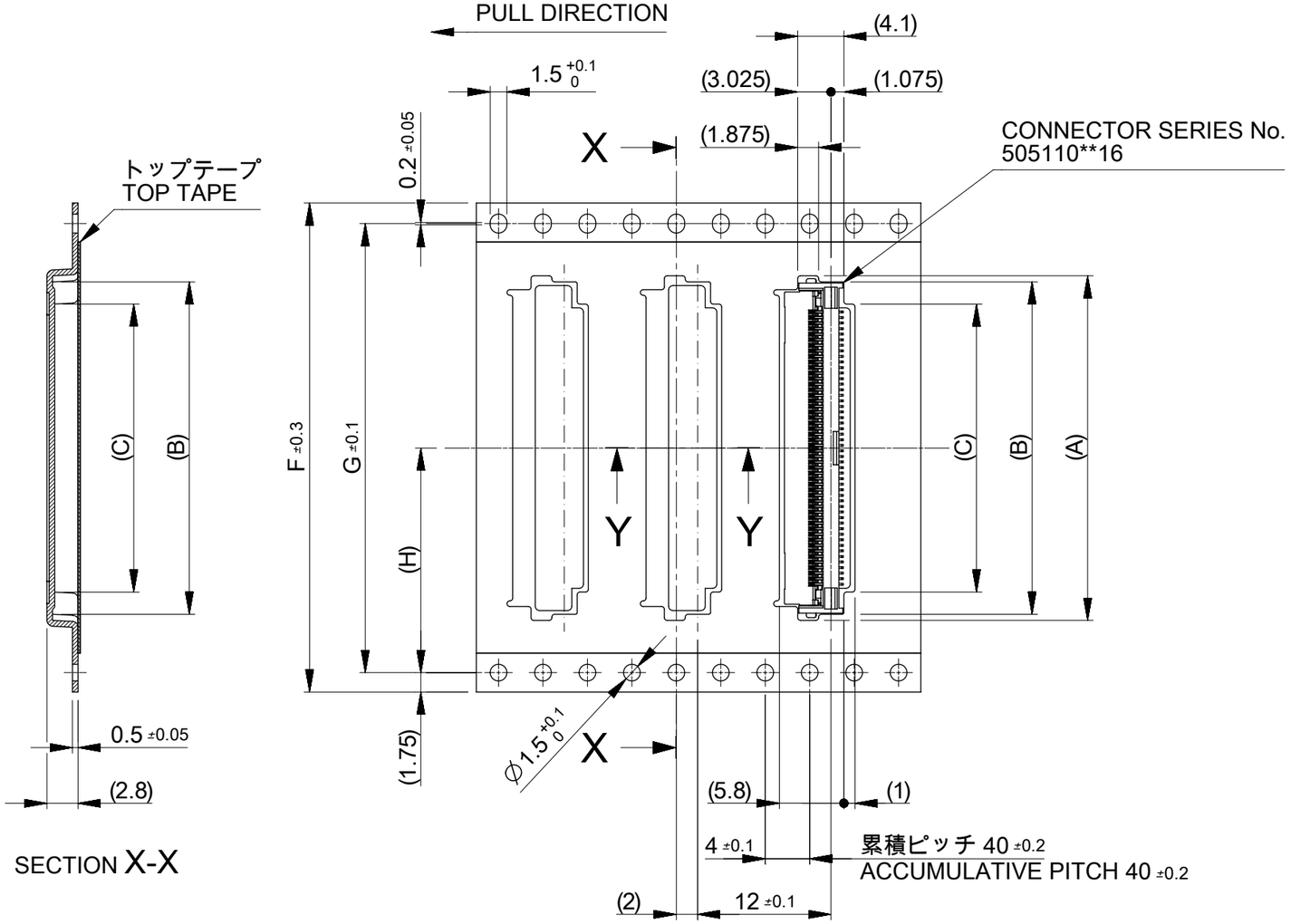

SECTION X-X

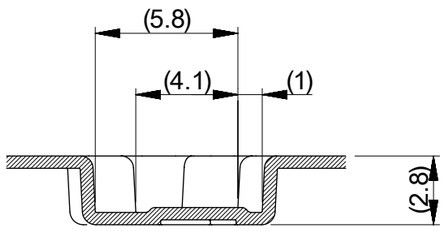

SECTION Y-Y
SCALE 4:1

H	G	F	E	D	C	B	A	EMBOSSED PACKAGE オーダー番号 ORDER No.	Ckt
26.2	52.4	56	61.4	57.4	40.9	44.9	46	5051108096	80
					35.9	39.9	41	5051107096	70
					34.9	38.9	40	5051106896	68
					32.9	36.9	38	5051106496	64
					31.4	35.4	36.5	5051106196	61
					30.9	34.9	36	5051106096	60
					30.4	34.4	35.5	5051105996	59
					29.9	33.9	35	5051105896	58
					29.4	33.4	34.5	5051105796	57
					28.9	32.9	34	5051105696	56
26.2	52.4	56	61.4	57.4	28.4	32.4	33.5	5051105596	55
					27.9	31.9	33	5051105496	54
					27.4	31.4	32.5	5051105396	53
					26.9	30.9	32	5051105296	52
					26.4	30.4	31.5	5051105196	51
20.2	40.4	44	49.4	45.4	25.9	29.9	31	5051105096	50
					25.4	29.4	30.5	5051104996	49
					24.9	28.9	30	5051104896	48
					24.4	28.4	29.5	5051104796	47
					23.9	27.9	29	5051104696	46
					23.4	27.4	28.5	5051104596	45
					22.9	26.9	28	5051104496	44
					22.4	26.4	27.5	5051104396	43
					21.9	25.9	27	5051104296	42
					21.4	25.4	26.5	5051104196	41
					20.9	24.9	26	5051104096	40
					20.4	24.4	25.5	5051103996	39
					19.9	23.9	25	5051103896	38
					19.4	23.4	24.5	5051103796	37
					18.9	22.9	24	5051103696	36
					18.4	22.4	23.5	5051103596	35
					17.9	21.9	23	5051103496	34
					17.4	21.4	22.5	5051103396	33
					16.9	20.9	22	5051103296	32
					16.4	20.4	21.5	5051103196	31
14.2	28.4	32	37.4	33.4	15.9	19.9	21	5051103096	30
					15.4	19.4	20.5	5051102996	29
					14.9	18.9	20	5051102896	28
					14.4	18.4	19.5	5051102796	27
					13.9	17.9	19	5051102696	26
					13.4	17.4	18.5	5051102596	25
					12.9	16.9	18	5051102496	24
					12.4	16.4	17.5	5051102396	23
					11.9	15.9	17	5051102296	22
					11.4	15.4	16.5	5051102196	21
H	G	F	E	D	C	B	A	EMBOSSED PACKAGE オーダー番号 ORDER No.	Ckt

THIS DRAWING CONTAINS INFORMATION THAT IS PROPRIETARY TO MOLEX ELECTRONIC TECHNOLOGIES, LLC AND SHOULD NOT BE USED WITHOUT WRITTEN PERMISSION

DIMENSION UNITS	SCALE
mm	2:1

GENERAL TOLERANCES (UNLESS SPECIFIED)

ANGULAR TOL	±	3.0 °
4 PLACES	±	0.2
3 PLACES	±	0.2
2 PLACES	±	0.2
1 PLACE	±	0.25
0 PLACES	±	0.3

DRAFT WHERE APPLICABLE MUST REMAIN WITHIN DIMENSIONS

CURRENT REV DESC:

EC NO: 605617
DRWN: JASANUMA 2018/10/05
CHK'D: TRSUZUKI 2018/10/10
APPR: RTAKEUCHI 2018/10/10

INITIAL REVISION:
DRWN: JASANUMA 2018/10/05
APPR: RTAKEUCHI 2018/10/10

molex

0.5 FPC ZIF 2 CONT EMBT PKG

PRODUCT CUSTOMER DRAWING

DOCUMENT NUMBER	DOC TYPE	DOC PART	REVISION
5051100008-SD	PSD	000	A

THIRD ANGLE PROJECTION	DRAWING	SERIES	MATERIAL NUMBER	CUSTOMER	SHEET NUMBER
	A3-SIZE	505110	SEE CHART		3 OF 3

DOCUMENT STATUS	P1	RELEASE DATE	2018/10/10 01:08:21

FORMAT: master-tb-prod-A3
REVISION: H
DATE: 2018/01/18

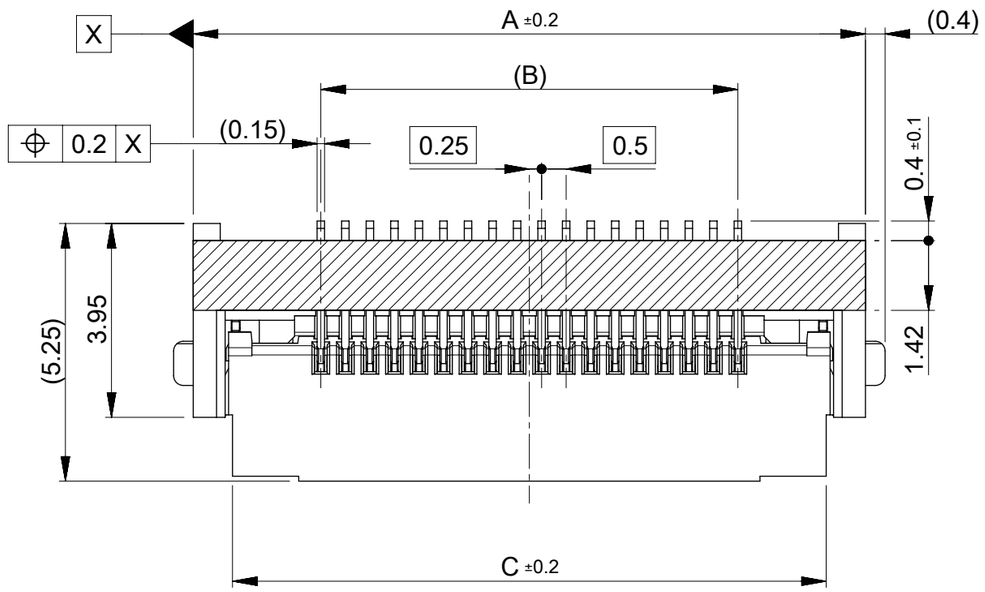

: PICK UP AREA

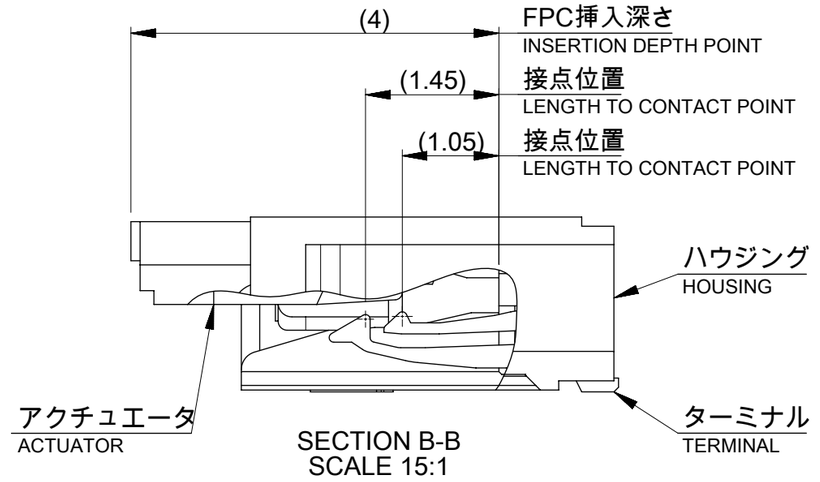

SECTION B-B
SCALE 15:1

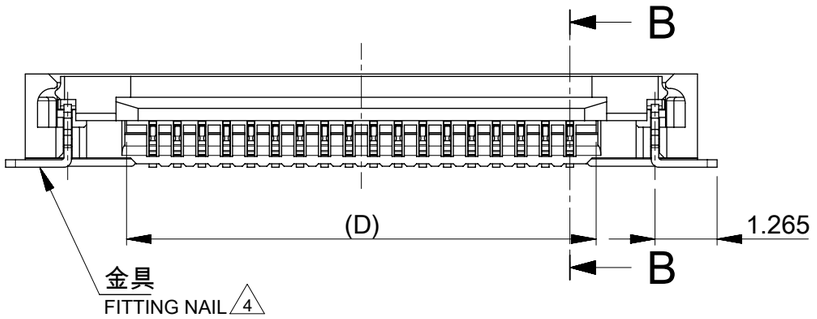

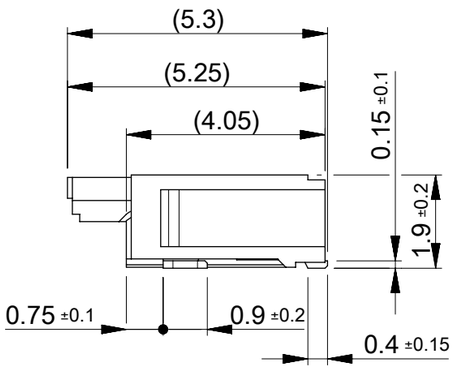

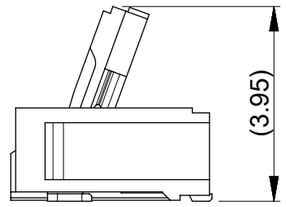

10.07	12.6	9	14.2	5051101997	19
9.57	12.1	8.5	13.7	5051101897	18
9.07	11.6	8	13.2	5051101797	17
8.57	11.1	7.5	12.7	5051101697	16
8.07	10.6	7	12.2	5051101597	15
7.57	10.1	6.5	11.7	5051101497	14
7.07	9.6	6	11.2	5051101397	13
6.57	9.1	5.5	10.7	5051101297	12
6.07	8.6	5	10.2	5051101197	11
5.57	8.1	4.5	9.7	5051101097	10
5.07	7.6	4	9.2	5051100997	9
4.57	7.1	3.5	8.7	5051100897	8
4.07	6.6	3	8.2	5051100797	7
3.57	6.1	2.5	7.7	5051100697	6
3.07	5.6	2	7.2	5051100597	5
2.57	5.1	1.5	6.7	5051100497	4
D	C	B	A	EMBOSSED PACKAGE オーダー番号 ORDER No.	Ckt

THIS DRAWING CONTAINS INFORMATION THAT IS PROPRIETARY TO MOLEX ELECTRONIC TECHNOLOGIES, LLC AND SHOULD NOT BE USED WITHOUT WRITTEN PERMISSION

DIMENSION UNITS	SCALE
mm	8:1

GENERAL TOLERANCES (UNLESS SPECIFIED)

ANGULAR TOL	±	3.0 °
4 PLACES	±	0.2
3 PLACES	±	0.2
2 PLACES	±	0.2
1 PLACE	±	0.25
0 PLACES	±	0.3

DRAFT WHERE APPLICABLE MUST REMAIN WITHIN DIMENSIONS

CURRENT REV DESC:

EC NO: 720907
DRWN: RAJMOK 2022/09/09
CHK'D: YNUKANOBU 2022/09/22
APPR: YNAITO 2022/09/22

INITIAL REVISION:
DRWN: JASANUMA 2018/10/05
APPR: RTAKEUCHI 2018/10/10

THIRD ANGLE PROJECTION | DRAWING: A3-SIZE | SERIES: 505110

molex

0.5 FPC ZIF 2 CONT HSG ASSY

PRODUCT CUSTOMER DRAWING

DOCUMENT NUMBER	DOC TYPE	DOC PART	REVISION
5051101008-SD	PSD	000	C

MATERIAL NUMBER	CUSTOMER	SHEET NUMBER
		1 OF 4

DOCUMENT STATUS	P1	RELEASE DATE	2022/09/22 11:54:38

CONNECTOR SERIES No. 505110**17

FORMAT: master-tb-prod-A3
REVISION: J1
DATE: 2021/05/01

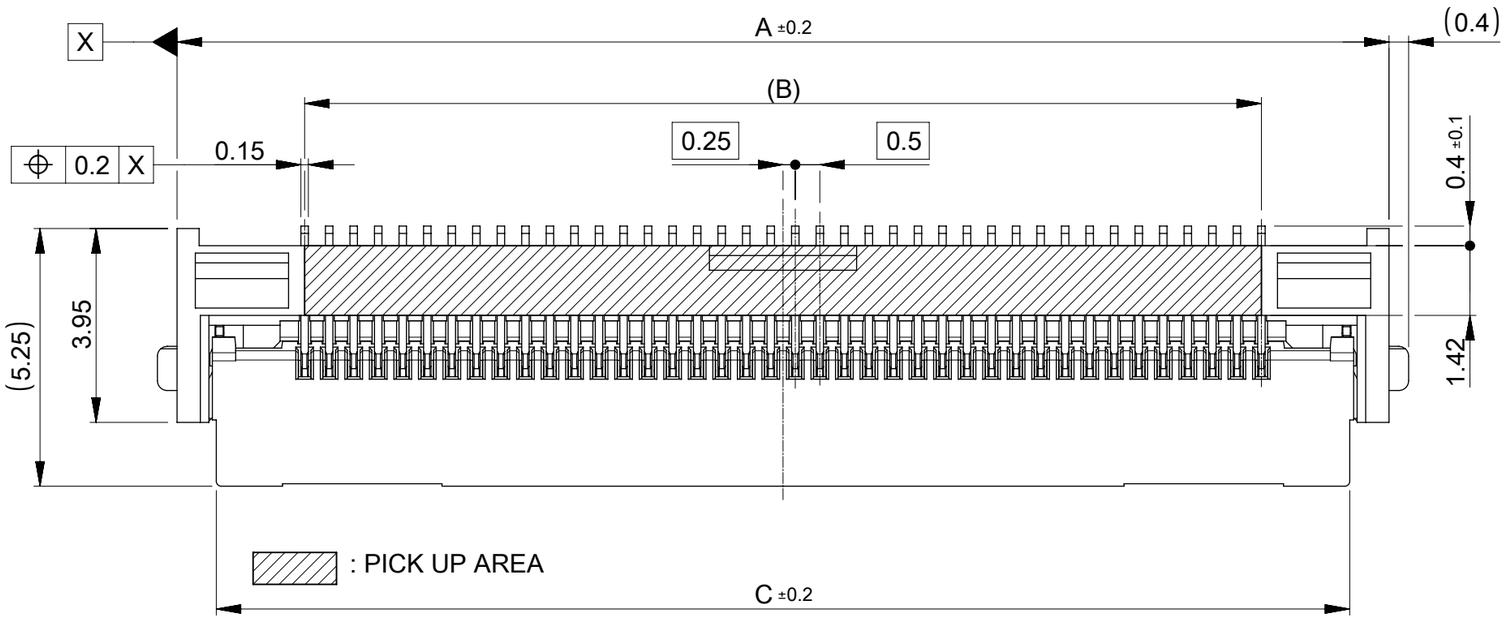

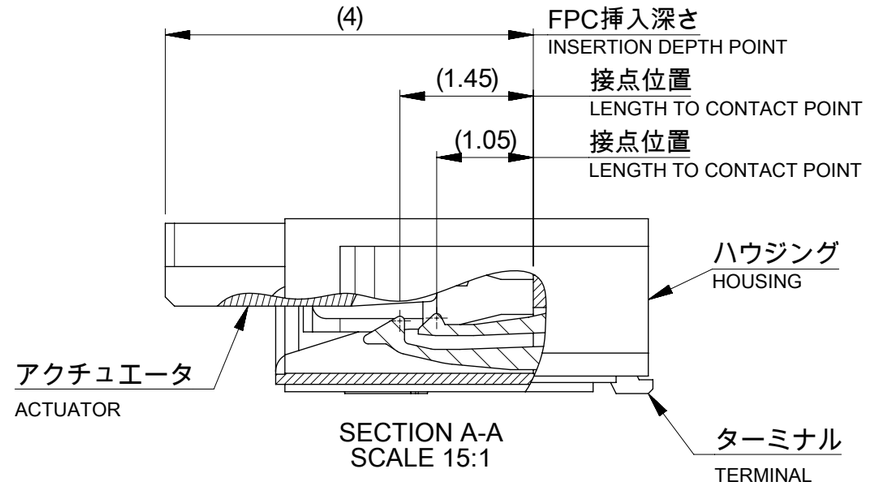

SECTION A-A
SCALE 15:1

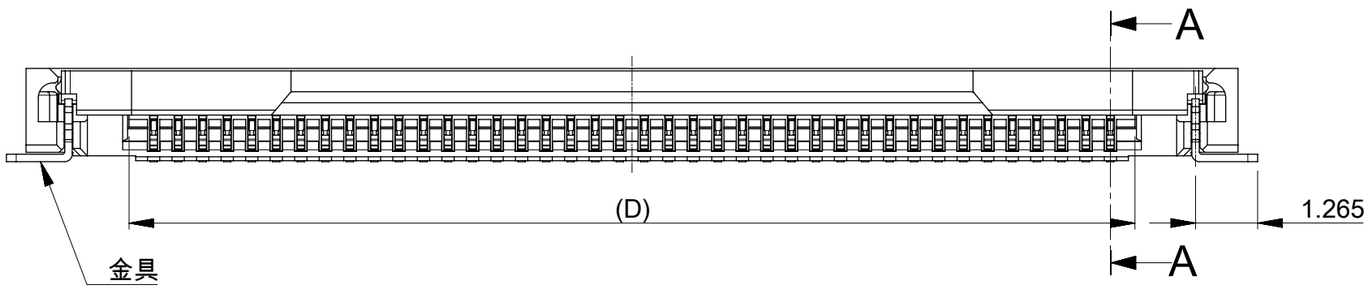

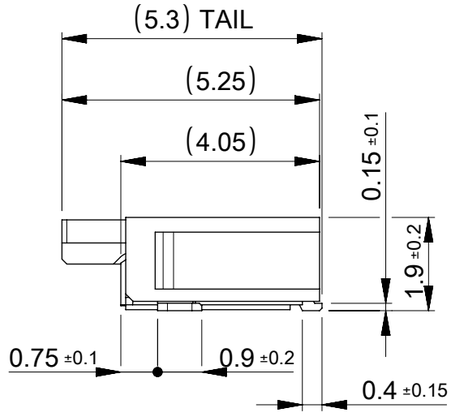

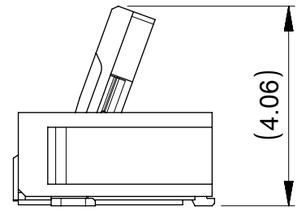

40.5	43.1	39.5	44.7	5051108096	80
35.5	38.1	34.5	39.7	5051107096	70
34.5	37.1	33.5	38.7	5051106896	68
32.5	35.1	31.5	36.7	5051106496	64
31	33.6	30	35.2	5051106196	61
30.5	33.1	29.5	34.7	5051106096	60
30	32.6	29	34.2	5051105996	59
29.5	32.1	28.5	33.7	5051105896	58
29	31.6	28	33.2	5051105796	57
28.5	31.1	27.5	32.7	5051105696	56
28	30.6	27	32.2	5051105596	55
27.5	30.1	26.5	31.7	5051105496	54
27	29.6	26	31.2	5051105396	53
26.5	29.1	25.5	30.7	5051105296	52
26	28.6	25	30.2	5051105196	51
25.5	28.1	24.5	29.7	5051105096	50
D	C	B	A	EMBOSSED PACKAGE オーダー番号 ORDER No.	Ckt

25	27.6	24	29.2	5051104996	49
24.5	27.1	23.5	28.7	5051104896	48
24	26.6	23	28.2	5051104796	47
23.5	26.1	22.5	27.7	5051104696	46
23	25.6	22	27.2	5051104596	45
22.5	25.1	21.5	26.7	5051104496	44
22	24.6	21	26.2	5051104396	43
21.5	24.1	20.5	25.7	5051104296	42
21	23.6	20	25.2	5051104196	41
20.5	23.1	19.5	24.7	5051104096	40
D	C	B	A	EMBOSSED PACKAGE オーダー番号 ORDER No.	Ckt

20	22.6	19	24.2	5051103996	39
19.5	22.1	18.5	23.7	5051103896	38
19	21.6	18	23.2	5051103796	37
18.5	21.1	17.5	22.7	5051103696	36
18	20.6	17	22.2	5051103596	35
17.5	20.1	16.5	21.7	5051103496	34
17	19.6	16	21.2	5051103396	33
16.5	19.1	15.5	20.7	5051103296	32
16	18.6	15	20.2	5051103196	31
15.5	18.1	14.5	19.7	5051103096	30
D	C	B	A	EMBOSSED PACKAGE オーダー番号 ORDER No.	Ckt

15	17.6	14	19.2	5051102996	29
14.5	17.1	13.5	18.7	5051102896	28
14	16.6	13	18.2	5051102796	27
13.5	16.1	12.5	17.7	5051102696	26
13	15.6	12	17.2	5051102596	25
12.5	15.1	11.5	16.7	5051102496	24
12	14.6	11	16.2	5051102396	23
11.5	14.1	10.5	15.7	5051102296	22
11	13.6	10	15.2	5051102196	21
10.5	13.1	9.5	14.7	5051102096	20
D	C	B	A	EMBOSSED PACKAGE オーダー番号 ORDER No.	Ckt

THIS DRAWING CONTAINS INFORMATION THAT IS PROPRIETARY TO MOLEX ELECTRONIC TECHNOLOGIES, LLC AND SHOULD NOT BE USED WITHOUT WRITTEN PERMISSION

DIMENSION UNITS	mm
SCALE	8:1
GENERAL TOLERANCES (UNLESS SPECIFIED)	
ANGULAR TOL	± 3.0 °
4 PLACES	± 0.2
3 PLACES	± 0.2
2 PLACES	± 0.2
1 PLACE	± 0.25
0 PLACES	± 0.3
DRAFT WHERE APPLICABLE MUST REMAIN WITHIN DIMENSIONS	

CURRENT REV DESC:

EC NO: 720907
DRWN: RAJMOK 2022/09/09
CHK'D: YNUKANOBU 2022/09/22
APPR: YNAITO 2022/09/22

INITIAL REVISION:
DRWN: JASANUMA 2018/10/05
APPR: RTAKEUCHI 2018/10/10

molex

0.5 FPC ZIF 2 CONT HSG ASSY

PRODUCT CUSTOMER DRAWING

DOCUMENT NUMBER	DOC TYPE	DOC PART	REVISION
5051101008-SD	PSD	000	C

THIRD ANGLE PROJECTION	DRAWING	SERIES	MATERIAL NUMBER	CUSTOMER	SHEET NUMBER
	A3-SIZE	505110			2 OF 4

DOCUMENT STATUS	P1	RELEASE DATE	2022/09/22 11:54:38

CONNECTOR SERIES No. 505110**16

FORMAT: master-lb-prod-A3
REVISION: J1
DATE: 2021/05/01

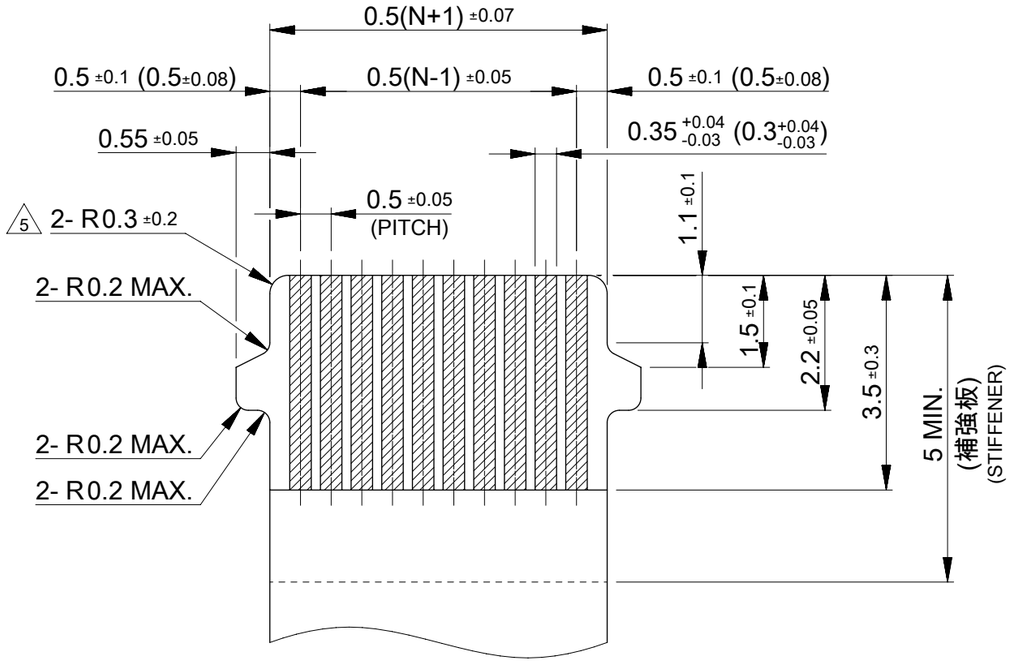

適合FPC/FFC推奨寸法
APPLICABLE FPC/FFC RECOMMENDED DIMENSION
( ) : FFCに適用
( ) : APPLY TO FFC

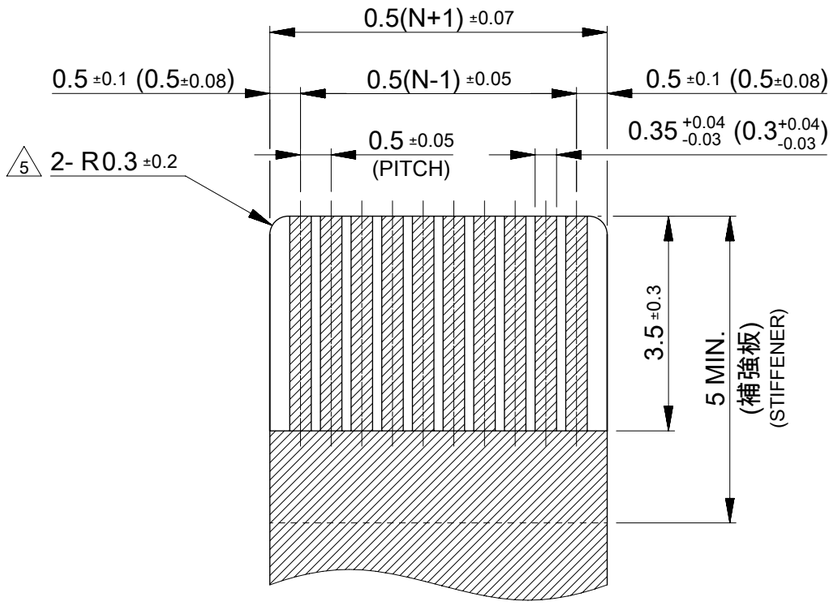

適合FPC/FFC推奨寸法
APPLICABLE FPC/FFC RECOMMENDED DIMENSION
( ) : FFCに適用
( ) : APPLY TO FFC

*1 : 125°Cを超える環境下で使用する場合に適用。
Apply when use in over 125 deg.C environment.

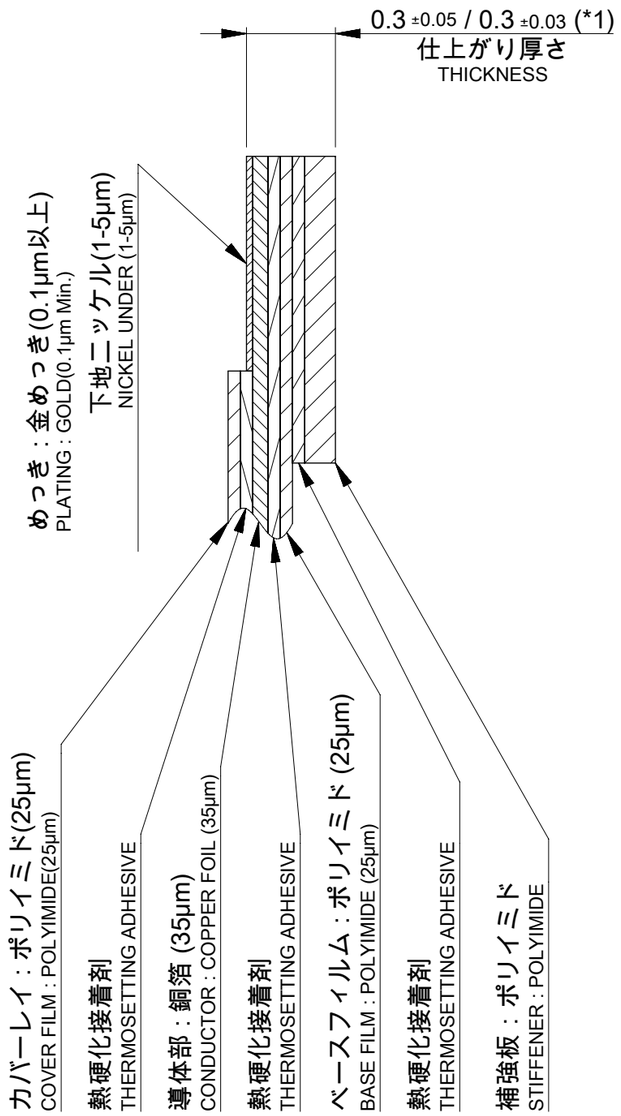

FPC構成推奨仕様
STRUCTURE OF FPC

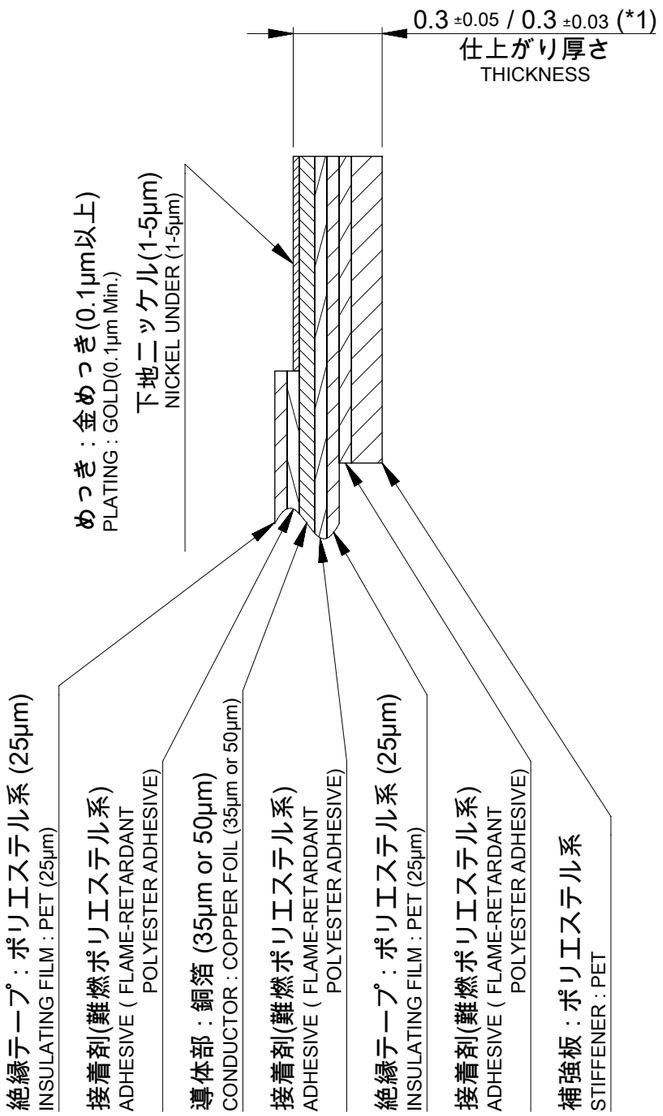

FFC構成推奨仕様
STRUCTURE OF FFC

THIS DRAWING CONTAINS INFORMATION THAT IS PROPRIETARY TO MOLEX ELECTRONIC TECHNOLOGIES, LLC AND SHOULD NOT BE USED WITHOUT WRITTEN PERMISSION

DIMENSION UNITS	SCALE
mm	10:1

GENERAL TOLERANCES (UNLESS SPECIFIED)

ANGULAR TOL	±	3.0 °
4 PLACES	±	0.2
3 PLACES	±	0.2
2 PLACES	±	0.2
1 PLACE	±	0.25
0 PLACES	±	0.3

DRAFT WHERE APPLICABLE MUST REMAIN WITHIN DIMENSIONS

CURRENT REV DESC:

EC NO: 720907
DRWN: RAJMOK 2022/09/09
CHK'D: YNUKANOBU 2022/09/22
APPR: YNAITO 2022/09/22

INITIAL REVISION:
DRWN: JASANUMA 2018/10/05
APPR: RTAKEUCHI 2018/10/10

THIRD ANGLE PROJECTION | DRAWING: A3-SIZE | SERIES: 505110

molex

0.5 FPC ZIF 2 CONT HSG ASSY

PRODUCT CUSTOMER DRAWING

DOCUMENT NUMBER	DOC TYPE	DOC PART	REVISION
5051101008-SD	PSD	000	C

MATERIAL NUMBER | CUSTOMER | SHEET NUMBER: 3 OF 4

DOCUMENT STATUS	P1	RELEASE DATE	2022/09/22 11:54:38

FORMAT: master-lb-prod-A3
REVISION: J1
DATE: 2021/05/01

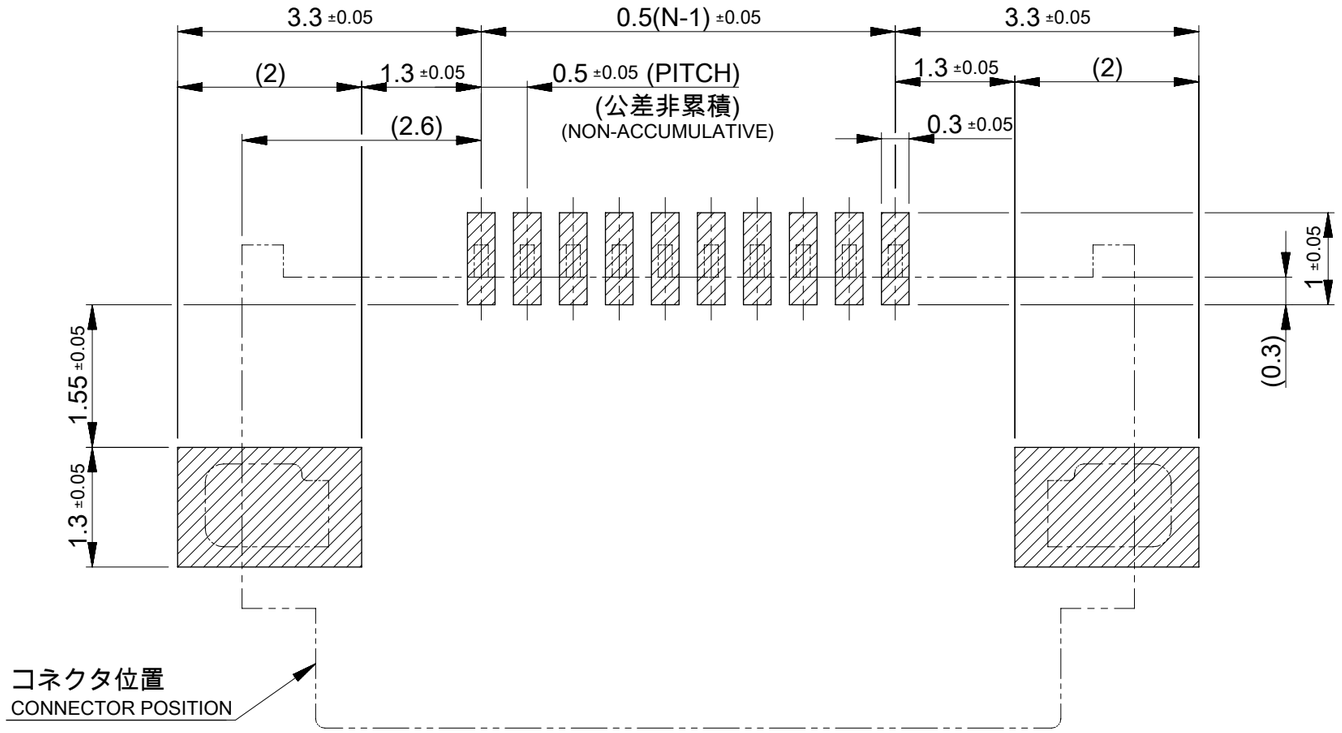

推奨基板レイアウト
RECOMMENDED P.W.B PATTERN LAYOUT

参考マスク厚 : 100μm
REFERENCE SCREEN THICKNESS : 100μm

参考マスク開口率 : 100%
REFERENCE SCREEN OPEN RATIO : 100%

FPC/FFCについて　ABOUT FPC/FFC

打ち抜き方向は導体側から補強板側を推奨します。
導体部については軟箔銅35μmまたは50μmを推奨します。
FFCに規定された定格温度がFFC単体前提である場合が御座います。
コネクタと組み合わせての実使用において、接着層が劣化するなどの信頼性を満足できないケースを回避するため、実機での評価/確認をお願いいたします。
RECOMMENDED PUNCHING DIRECTION : FROM CONDUCTOR SIDE TO STIFFENER SIDE
RECOMMENDED CONDUCTOR SPEC : SOFT COPPER FOIL
RECOMMENDED CONDUCTOR THICKNESS : 35 MICROMETER OR 50 MICROMETER
NOTE : WHEN ACTUALLY USING IT WITH CONNECTOR, PLEASE DO THE EVALUATION AND THE CONFIRMATION WITH AN ACTUAL EQUIPMENT TO EVADE THE CASE WHERE RELIABILITY CANNOT BE FILLED (THE ADHESIVE LINE OF FFC IS DETERIORATED ETC.)

FPCについて　ABOUT FPC

補強フィルム材質はポリイミドを推奨します。ベースフィルムは25μmを推奨します。
接着剤は熱硬化接着剤を推奨します。
尚、接着剤の接点部への付着は導通不良の原因になりますので、染み出しが無い様お願い致します。
RECOMMENDED STIFFENER MATERIAL : POLYIMIDE
RECOMMENDED BASE FILM THICKNESS : 25 MICROMETER
RECOMMENDED ADHESIVE : THERMOSETTING ADHESIVE
NOTE : PLEASE PUT APPROPRIATE AMOUNT OF ADHESIVE ON ADHEREND BECAUSE THERE IS A POSSIBILITY THAT THE EXTRA ADHESIVE CAUSES THE DEFECT IN ELECTRICAL CONTINUITY.

注記　NOTES

1. 使用材料 MATERIAL

   ハウジング　　: 液晶ポリマー　ガラス充填、UL94V-0 (ベージュ)
   HOUSING　　LIQUID CRYSTAL POLYMER　GLASS FILLED, UL94V-0 (BEIGE)

   アクチュエータ : ポリアミド　ガラス充填、UL94V-0 (黒)
   ACTUATOR　　POLYAMIDE GLASS FILLED, UL94V-0 (BLACK)

   ターミナル　　: 銅合金(t=0.15)
   TERMINAL　　COPPER ALLOY

   金具　　: リン青銅 (t=0.15)
   FITTING NAIL　　PHOSPHOR BRONZE

2. めっき仕様 PLATING

   ターミナル TERMINAL
   コンタクト部 : 部分金めっき (0.05μm以上)
   CONTACT AREA : SEPARATED GOLD PLATING (0.05μm MINIMUM)

   テール部 : 部分金めっき
   SOLDER TAIL AREA : SEPARATED GOLD PLATING

   下地:ニッケルめっき (1.0μm以上)
   UNDERPLATE : NICKEL OVERALL (1.0μm MINIMUM)

   金具 FITTING NAIL
   錫めっき (1.0μm以上)
   TIN PLATING (1.0μm MINIMUM)

   下地:ニッケルめっき (1.0μm以上)
   UNDER PLATING : NICKEL PLATING (1.0μm MINIMUM)

3. エンボステープ梱包時は、アクチュエータが閉じた状態とする。
   IN THE PACKAGE, ACTUATOR OF PART SHOULD BE CLOSED.

△4 パターン剥離止め用金具
   FITTING NAIL FOR PREVENTING PEELING OF P.W.B. PATTERN.

△5 R0.3はFPC/FFC導体部にかからないこと。
   R0.3 MUST NOT BE OVERLAPPED TO PATTERN OF FPC/FFC.

6. N : 極数　N : CIRCUIT

7. テールと金具を併せた平坦度は0.1mm以下とする。
   TAILS AND NAILS COPLANALITY TO BE 0.1mm MAXIMUM.

THIS DRAWING CONTAINS INFORMATION THAT IS PROPRIETARY TO MOLEX ELECTRONIC TECHNOLOGIES, LLC AND SHOULD NOT BE USED WITHOUT WRITTEN PERMISSION

DIMENSION UNITS	SCALE
mm	15:1

GENERAL TOLERANCES (UNLESS SPECIFIED)	
ANGULAR TOL	± 3.0 °
4 PLACES	± 0.2
3 PLACES	± 0.2
2 PLACES	± 0.2
1 PLACE	± 0.25
0 PLACES	± 0.3

DRAFT WHERE APPLICABLE MUST REMAIN WITHIN DIMENSIONS

CURRENT REV DESC:

EC NO: 720907
DRWN: RAJMOK 2022/09/09
CHK'D: YNUKANOBU 2022/09/22
APPR: YNAITO 2022/09/22

INITIAL REVISION:
DRWN: JASANUMA 2018/10/05
APPR: RTAKEUCHI 2018/10/10

THIRD ANGLE PROJECTION | DRAWING: A3-SIZE | SERIES: 505110

molex

0.5 FPC ZIF 2 CONT HSG ASSY

PRODUCT CUSTOMER DRAWING

DOCUMENT NUMBER	DOC TYPE	DOC PART	REVISION
5051101008-SD	PSD	000	C

MATERIAL NUMBER | CUSTOMER | SHEET NUMBER: 4 OF 4

DOCUMENT STATUS	P1	RELEASE DATE	2022/09/22 11:54:38

FORMAT: master-ib-prod-A3
REVISION: J1
DATE: 2021/05/01