LUCKI CM ELECTRONICS Co.,Ltd

APPROVAL SHEET

Customer : _____

Part Number: _____

LK Part No.: L32AOC022579PBL

Holder : 3225 OSC

Frequency: 22.5792MHz 3.3V

Manufacturer: Lucki Electronics

Date: 2023-04-25

Prepared	Checked	Approved
Zhao Qian	Zhang Dongwei	Zhang Bin

(For Customer Use)

Acceptable	

Lucki Electronics CO.,LTD

LUCKI CM ELECTRONICS Co.,Ltd

Revised Record				
Rev.	Rev. Date	Item	Content	Remark

Lucki Electronics CO.,LTD

LUCKI CM ELECTRONICS Co.,Ltd

ELECTRICAL PARAMETERS

No.	Item	Symb.	Electrical Specification				Remark
			Min.	Typ.	Max.	Units	
1	Nominal Frequency	F0		22.579200		MHz	
2	Frequency Stability		-20		20	ppm	All condition*
3	Operating Temperature Range	TOPR	-20		75	℃	
4	Storage Temperature	TSTG	-55		125	℃	
5	Power supply Voltage	V_{DD}		3.3±10%		V	
6	Aging Per Year	Fa	-3.0		3.0	ppm	First Year
7	Supply current	I_{DD}			10	mA	
8	Output symmetry	Sym	45		55	%	
9	Rise time	Tr			5.0	ns	10%~90%V_{DD}
10	Fall time	Tf			5.0	ns	90%~10%V_{DD}
11	Output voltage	V_{OH}	90%			V_{DD}	
		V_{OL}			10%	V_{DD}	
12	Output load Hcmos Load				15	pF	
13	Start-up time				10	mS	
14	Pin 1, E/D function	pin 1="High "or "open" .....output active at pin 3 pin 1="Low" .....high impedance at pin 3 pin 1="Low"&Floating …… unstable at pin3,disallowed for this status					
15	Package type	POSC3225					

NOTE：Storage Temperature is only for the product itself,the temperature for the packing material is -4~40℃.

All condition*：Include 25℃ tolerance, operating temperature range , input voltage change, aging, load change.

STORAGE REQUIRMENT

Storage environmental conditions: -4~40℃， 70%RH max.

Maximum storage time: 24 Months from date of manufacture.

Lucki Electronics CO.,LTD

LUCKI CM ELECTRONICS Co.,Ltd

- **HCMOS Test Circuit**

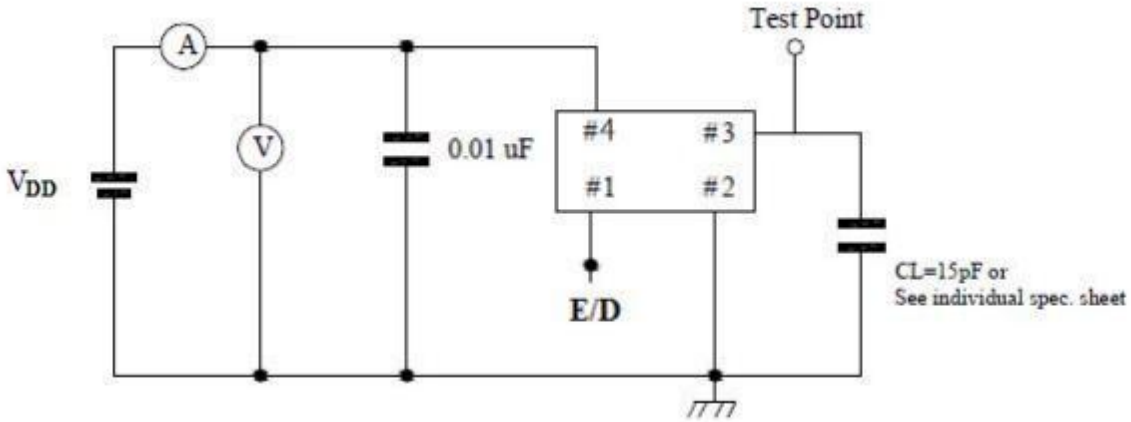

Enable/ Disable Function		
Input (pin 1)	Output (pin 3)	Oscillator
Open	Enable	Normal operation
V_{IH} : 0.7*V_{DD} ~ V_{DD}	Enable	Normal operation
V_{IL} : 0V ~ 0.3*V_{DD}	Disable	Stop oscillation

HCMOS OUTPUT WAVEFORM

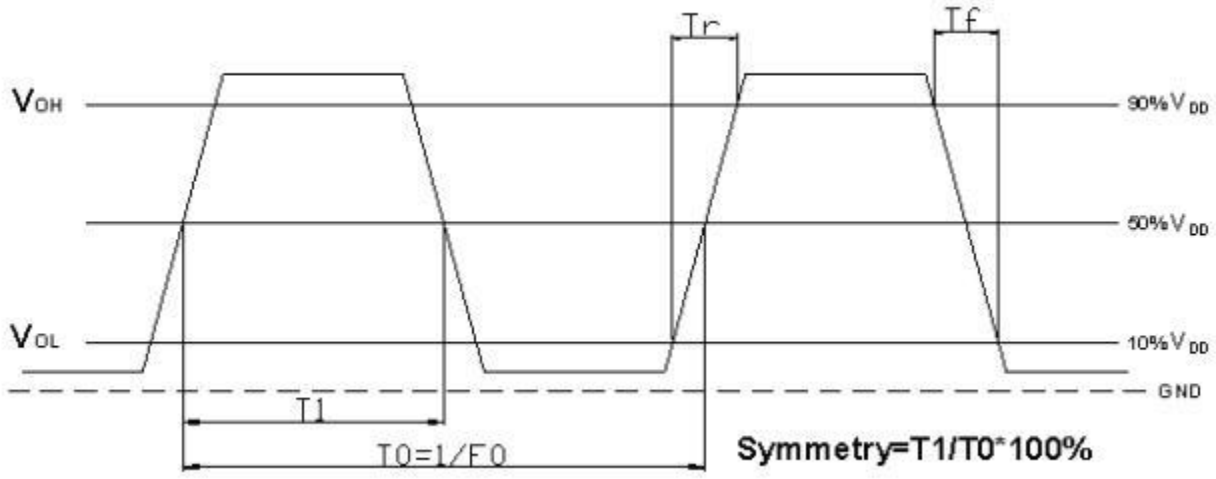

LUCKI CM ELECTRONICS Co.,Ltd

- **OUTLINE DIMENSIONS** (unit: mm)

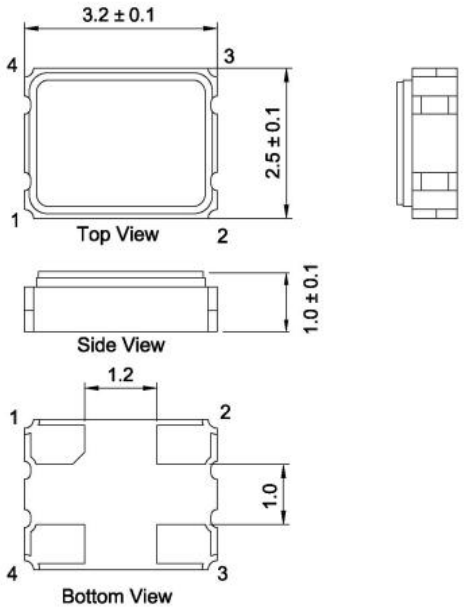

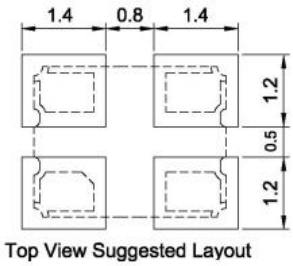

Pin	Connection
1	E/D
2	GND
3	Output
4	V_{DD}

Note：■ 0.01uF bypass capacitor should be placed between V_{DD} (pin 4) and GND (pin 2)to minimize power supply line noise；

■ Line shouldn't be layed under the oscillator in the PCB to minimize signal interference.

■ The Load we advise is only 15pF (that means drive only 1 CMOS/TTL gate).

■ unlabeled tolerance：± 0.1mm

- **MARKING**

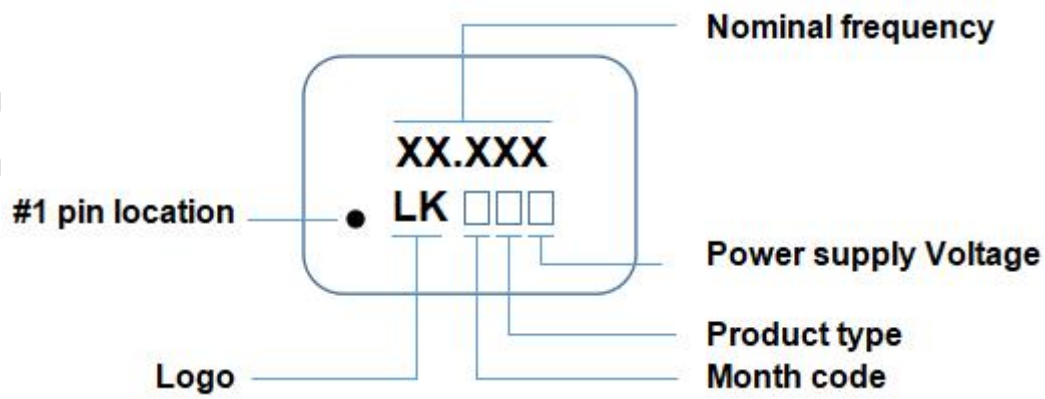

LUCKI CM ELECTRONICS Co.,Ltd

- **PRODUCT LAYOUT**

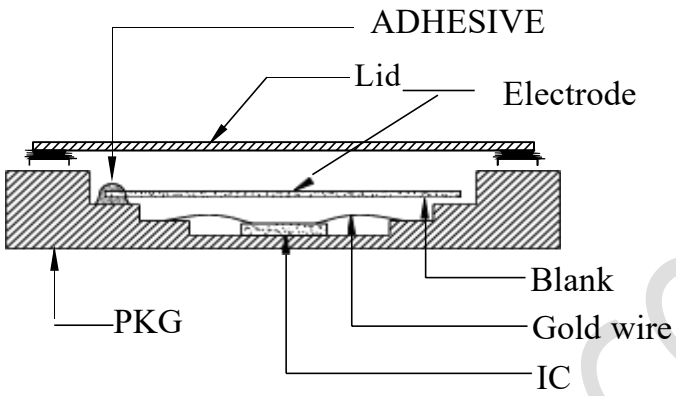

NO.	PART	MATERIAL	REMARK
1	LID	KOVAR(Fe+Co+Ni alloy)	
2	PKG	Al_2O_3	Base
3	BLANK	SiO_2	Quartz
4	ADHESIVE	Ag/Silicon	Support
5	Electrode	Noble metal	
6	IC	Si	
7	Gold wire	Au	Connect

Lucki Electronics CO.,LTD

LUCKI CM ELECTRONICS Co.,Ltd

- **REFLOW PROFILES**

Profiles Feature	Pb-Free Assembly
Average Ramp-up Rate (Ts max to Tp)	3℃/second max.
Preheat ■ Temperature Min (Ts min) ■ Temperature Max (Ts max) ■ Time (ts min to ts max)	 125℃ 200℃ 60~180 seconds
Time maintained above ■ Temperature (T_L) ■ Time (t_L)	 217℃ 60~150 seconds
Peak/Classification Temperature (Tp)	260℃
Time within 5℃ of actual Peak Temperature (t_p)	20~40 seconds
Ramp-down rate	6℃/second max.
Time 25℃ to Peak Temperature	8 minutes max.
Suggest reflow times	**3 Times max**

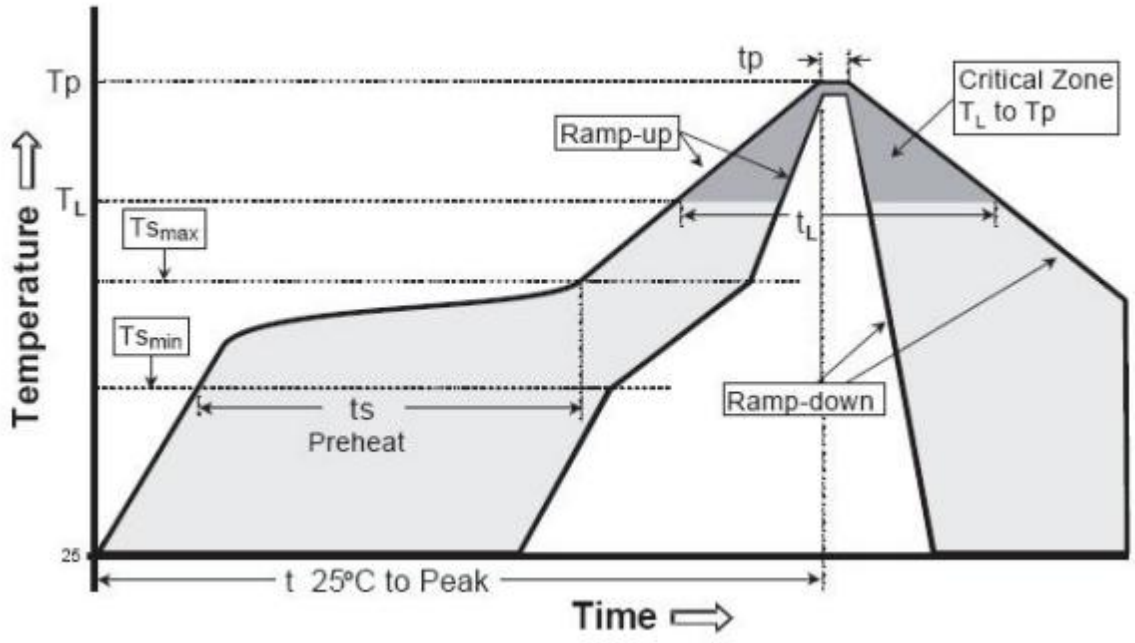

Remark：To reference JEDEC J-STD-020

LUCKI CM ELECTRONICS Co.,Ltd

- **PACKAGE(reference to EIA-481)**

Tape Dimensions(unit : mm)

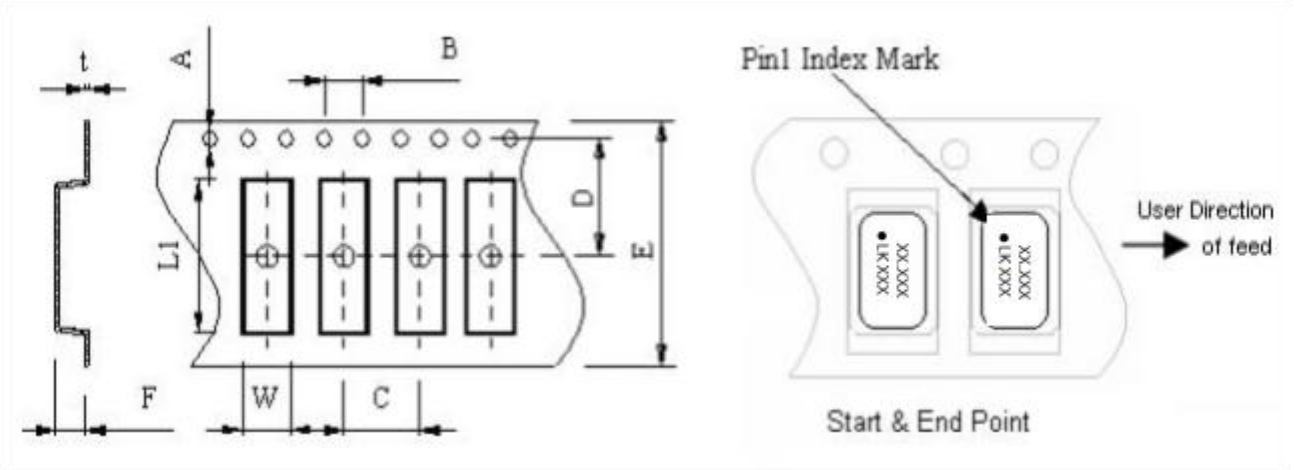

A	B	C	D	E	F	L1	W	t
1.5±0.1	4.0±0.1	4.0±0.1	3.5±0.1	8.0±0.1	1.4±0.10	3.5±0.10	2.7±0.10	0.25±0.05

Reel Dimensions(unit: mm)

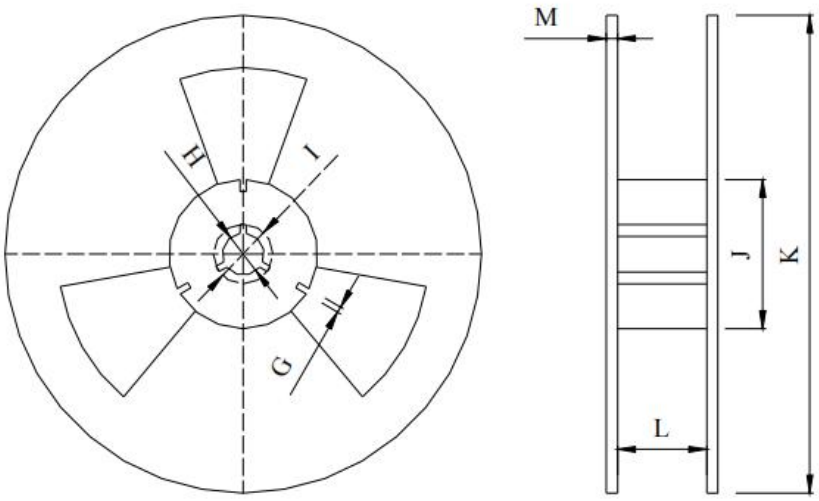

G	H	I	J	K	L	M
2.2±0.5	13.5±0.5	18.2±0.5	60.0± 1.0	178.0± 1.0	9.5± 1.0	1.6±0.2

*3000pcs/Reel

LUCKI CM ELECTRONICS Co.,Ltd

Carton Dimension (unit : mm)

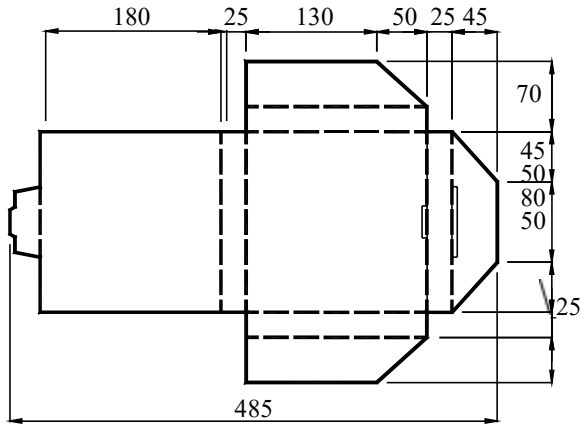

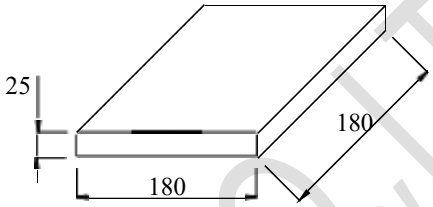

1 reel = 1 Inner box

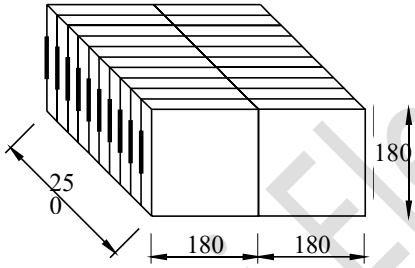

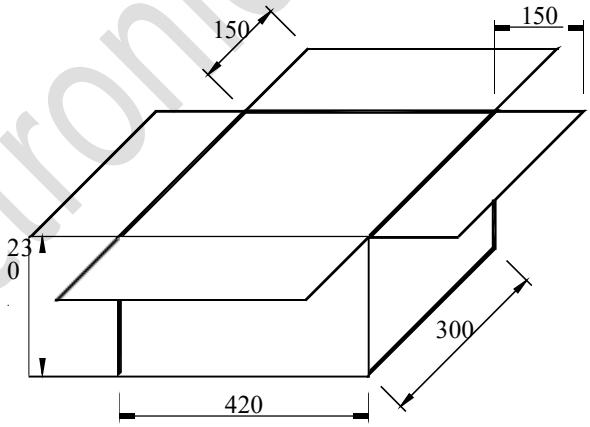

20 Inner boxes = 1 Carton,60kpcs = 1 Carton

Lucki Electronics CO.,LTD

LUCKI CM ELECTRONICS Co.,Ltd

- **Reliability characteristic:**

No.	Test Item	Test Conditions	Specifications
1	Solderability	Solder bath temperature:260℃ , dwell time:5 seconds, Solder: 100% tin	A new uniform coating of solder shall cover a minimum of 95% of the surface being immersed.
2	Resistance to soldering heat	Solder temperature 260+/-3℃,Immersion time:10 S Solder bath composition:100% tin	ΔF≤+/-5ppm
3	Vibration	The entire frequency range: 10Hz to 55Hz ,Amplitude:1.5mm This motion shall be applied for a period of 2 h in each of 3 mutually perpendicular axes(a total of 6h)	ΔF≤+/-5ppm
4	Drop test	3 Times Free Fall from 100cm height to concrete floor.	ΔF≤+/-5ppm
5	Cold Storage	The quartz crystal unit shall be stored at a temperature of –40+/-3℃ for 1000 h.then it shall be subjected to standard atmospheric conditions for 1h after which measurement shall be made.	ΔF≤+/-5ppm
6	High temperature high humidity storage (steady state)	The quartz crystal unit shall be stored at a temperature of 40+/-2℃ with relative humidity of 95% for 1000h, then it shall be subjected to standard atmospheric conditions for 2h after which measurement shall be made.	ΔF≤+/-5ppm
7	Thermal Shock	Temperature 1: -55℃±3℃ Temperature 2: 125℃±3℃ Temperature change between T1 and T2 at soonest Run 1000 cycles, maintain T1 and T2 5minutes each in one cycle	ΔF≤+/-5ppm
8	Sealing	Helium leakage detector shall used to measure the leakage rate of gas through any faulty seal. Pressure:500Kpa, duration:120 minutes .	Leakage rate≤ $1*10^{-9}$ $Pa.m^3/S$
9	High temperature Life test	The quartz crystal unit shall be stored at a temperature of 105+/-3℃ for 168h ,then it shall be subjected to standard atmospheric condition for 1h after which measurement shall be made.	ΔF≤+/-5ppm

Lucki Electronics CO.,LTD