MetalLions

MNR5012T Series

Wire Wound SMD Power Inductors

FEATURES

- Magnetic-resin shielded construction reduces buzz noise to ultra-low levels
- Metallization on ferrite core results in excellent shock resistance and damage-free durability
- Closed magnetic circuit design reduces leakage flux and Electro Magnetic Interference (EMI)
- 30% higher current rating than conventional inductors of equal size
- Takes up less PCB real estate and save more power
- Operate temperature range .... −40℃～+125℃(Including self temp. rise)
- RoHS compliant



APPLICATIONS

- Smart phone, smart TV, set top box, notebook
- Car navigation systems, telecomm base stations
- VR, AR
- LED lighting

Explanation of Part Number

MNR 5012 T 1R0 M T

1 2 3 4 5 6

- 1:Product Series:Wire Wound SMD Power Inductors
- 2:Dimensions:
- 3: Feature Type:T Type
- 4: Initial inductance value: 1R0 = 1.0uH
- 5: Tolerance of Inductance:M:+/-20%, N:+/-30%
- 6:Packing:Tape Carrier Package

Dimensions: [mm]

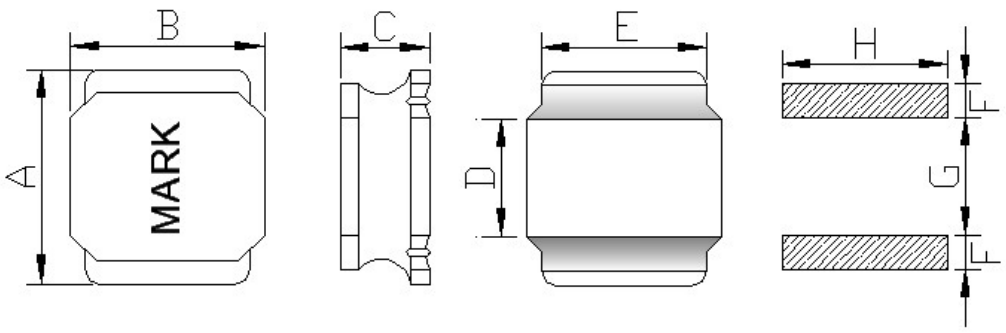

A	5.00±0.2
B	5.00±0.2
C	1.20 Max
D	2.5±0.3
E	4.0 Ref
F	1.3 Ref
G	2.3 Ref
H	4.7 Ref

Electrical Characteristics List

Part NO.	Tolerance(μH)	Test Freq. (kHz/v)	DCR Max (Ω)	Isat (A) Max.	Irms (A) Max.
MNR5012TR47NT	0.47	100/1	0.065	4.50	2.20
MNR5012T1R0MT	1.0	100/1	0.085	4.00	1.90
MNR5012T1R5MT	1.5	100/1	0.104	3.20	1.70
MNR5012T2R2MT	2.2	100/1	0.140	2.80	1.45
MNR5012T3R3MT	3.3	100/1	0.188	2.30	1.20
MNR5012T4R7MT	4.7	100/1	0.240	1.90	1.10
MNR5012T6R8MT	6.8	100/1	0.364	1.60	0.90
MNR5012T100MT	10	100/1	0.480	1.20	0.75
MNR5012T150MT	15	100/1	0.650	1.00	0.70
MNR5012T220MT	22	100/1	1.027	0.95	0.55
MNR5012T330MT	33	100/1	1.560	0.85	0.45

※1: All test data is referenced to 20°C ambient;
※2: Rated current: Isat or Irms, whichever is smaller;
※*3: Isat: DC current at which the inductance drops approximate 30% from its value without current;
※*4: Irms: DC current that causes the temperature rise (△T =40°C) from 20°C ambient.

Structure (The structure of product.)

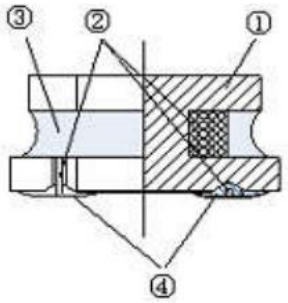

NO	Components	Material
①	Core	Ni-Zn Ferrite
②	Wire	Polyurethane system enameled copper wire
③	Magnetic Glue	Epoxy resin and magnetic powder
④	Plating	AgNiSn or FeNiCu + Sn Alloy

RELIABILITY TEST			
No.	TEST ITEM	SPECIFICATION	TEST CONDITION
1	High temperature Storage test	1. No significant defects in appearance. 2.ΔL/L ≦ 10% 3.ΔDCR/DCR ≦ 10%	Temperature: 125℃±5℃ (N: Follow the product specification for the setting.) Time : 96±2 hours Place the samples for one hour at room temperature and test them within two hours
2	Low temperature Storage test	1. No significant defects in appearance. 2.ΔL/L ≦ 10% 3.ΔDCR/DCR ≦ 10%	Temperature: -40℃±5℃ (M: Follow the product specification for the setting) Time : 96±2 hours Place the samples for one hour at room temperature and test them within two hours.
3	Humidity test	1. No significant defects in appearance. 2.ΔL/L ≦ 10% 3.ΔDCR/DCR ≦ 10%	Temperature: 40±2℃ , Humidity: 93±3%RH Time : 96±2 hours Place the samples for one hour at room temperature and test them within two hours
4	Solderability test	Terminals must have 95% minimum solder coverage	1.Dip pads in flux then dip in solder pot at 245±5°C for 5 second. 2.Solder: lead free 3.Flux: rosin flux
5	Heat endurance of flow soldering	1. No significant defects in appearance. 2.ΔL/L ≦ 10% 3.ΔDCR/DCR ≦ 10%	1.Refer to the above reflow curve and go through the reflow for twice. 2.The peak temperature : 260+0/-5℃
6	Vibration test	1.No significant defects in appearance. 2.No short and no open.	Apply frequency 10~55~10Hz and amplitude 1.5mm, 1 min/cycle in X ㄱY and Z direction for 2 hours each. (total 6 hours)
7	Terminal strength push test	1. Applied force:10N Duration: 10sec 2.Solder paste thickness:0.12mm 3.Meet the above requirements without any loose termina	Solder the test samples to the PCB through245 ℃ reflow, apply a standard force on the side of the test samples for 10 seconds. 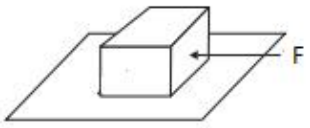

We have suggested the storage period of lead-free product should not over 6 months.

Packaging

1）Tape packing diagram

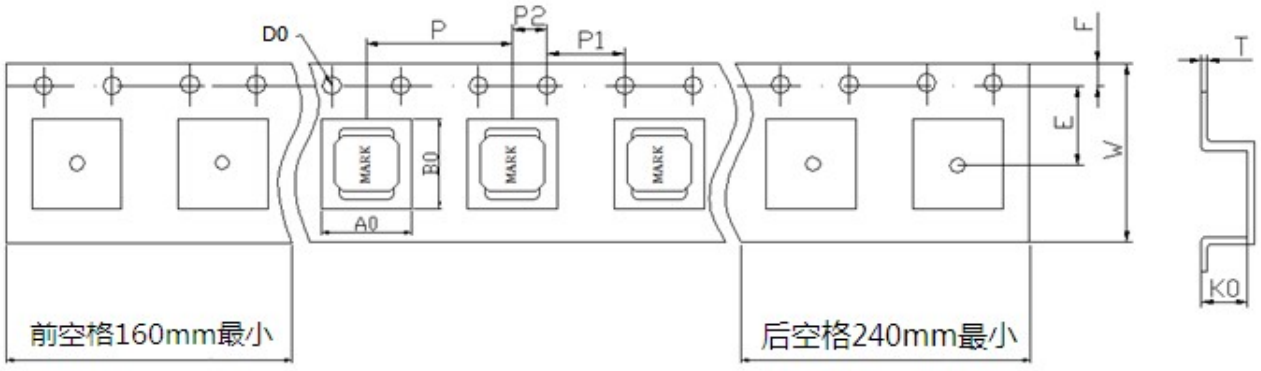

ITEM	W	A0	B0	K0	P	E	F	D0	P0	P2	T
DIM	12.00	5.30	5.30	1.40	8.00	5.50	1.75	1.50	4.00	2.00	0.30
TOLE	±0.3	±0.1	±0.1	±0.1	±0.1	±0.1	±0.1	+0.1	±0.1	±0.1	±0.05

2） Tape packing diagram

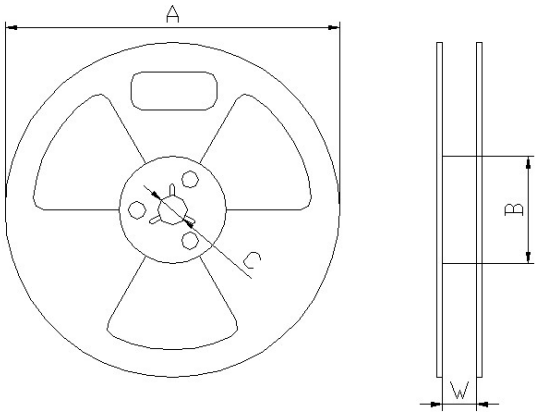

A	330±0.5
B	100±0.5
C	13.5±0.5
W	12.5±0.5

3） Tape packing diagram

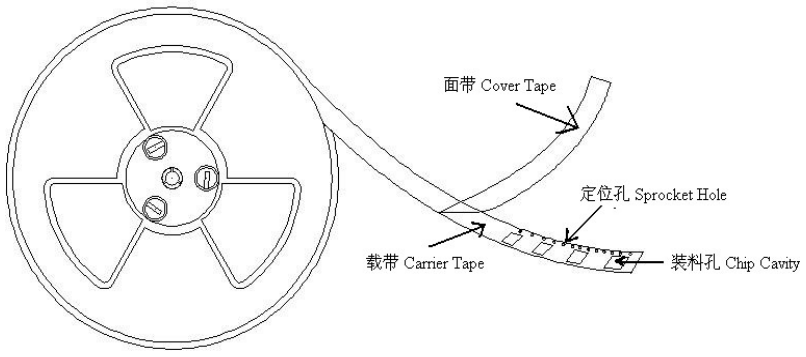

Packaging Quantity：3000pcs/Reel

SOLDERING CONDITIONS

1. Reflow Soldering Profile

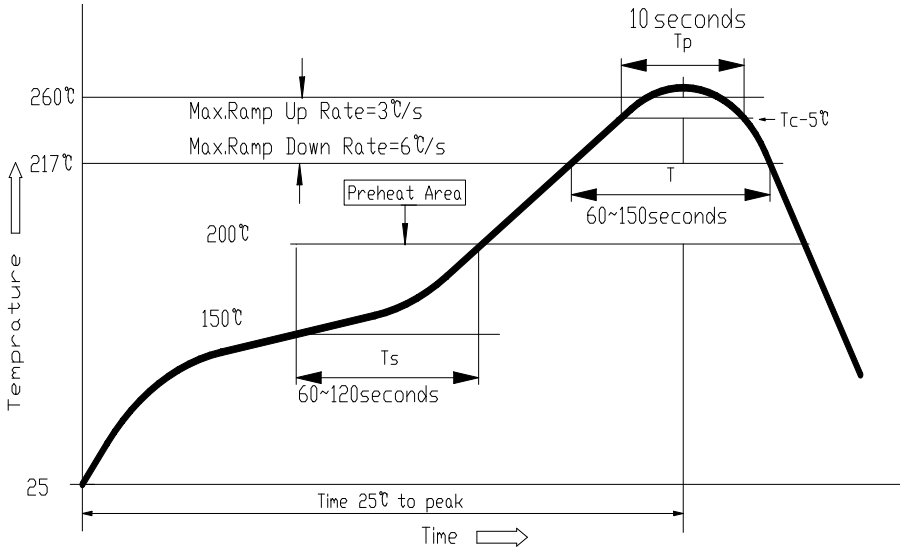

2. Soldering Iron

Reworking with electric solding iron must preheating at 150℃ for 1 minute is required,and do not directly touch the core with the tip of the soldering iron.The reworking soldering conditions are as follows.

①Temperature of soldering iron tip:350℃;

② Soldering iron power output:≤30W;

③ Diameter of soldering iron end:≤1.0mm;

④Soldering time:＜3 s

