MetalLions

MNR5020 Series

Wire Wound SMD Power Inductors

FEATURES

- Magnetic-resin shielded construction reduces buzz noise to ultra-low levels
- Metallization on ferrite core results in excellent shock resistance and damage-free durability
- Closed magnetic circuit design reduces leakage flux and Electro Magnetic Interference (EMI)
- 30% higher current rating than conventional inductors of equal size
- Takes up less PCB real estate and save more power
- Operate temperature range .... −40℃～+125℃(Including self temp. rise)
- RoHS compliant



APPLICATIONS

- Smart phone, smart TV, set top box, notebook
- Car navigation systems, telecomm base stations
- VR, AR
- LED lighting

Explanation of Part Number

MNR 5020T 1R0 M T

1 2 3 4 5

- 1:Product Series:Wire Wound SMD Power Inductors
- 2:Dimensions:
- 3: Initial inductance value: 1R0 = 1.0uH
- 4:Tolerance of Inductance:M:±20%
- 5.Packing:Tape Carrier Package

Dimensions: [mm]

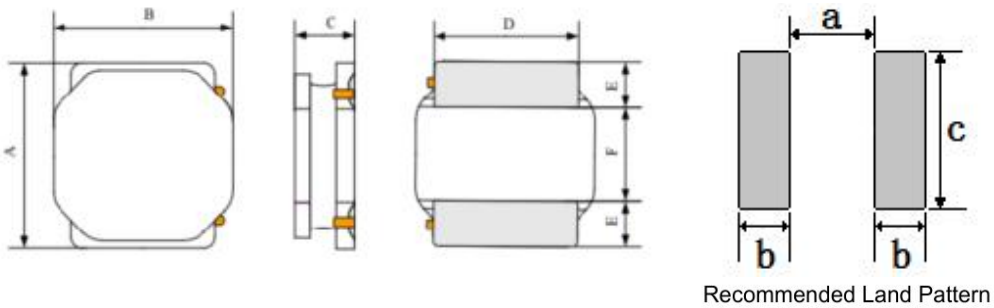

Recommended Land Pattern

Series	A	B	C	D	E	F	a Typ.	b Typ.	c Typ.
MNR5020	5.0±0.2	5.0±0.2	2.0 Max.	4.0±0.2	1.25±0.2	2.5±0.2	2.3	1.4	4.2

Electrical Characteristics List

Part Number	Inductance	DC Resistance		Isat(A)		Irms(A)		Marking
	100KHz/1.0V	Max.	Typ.	Max.	Typ.	Max.	Typ.	
Units	（uH）	Ω	Ω	A	A	A	A	
MNR5020TR22NT	0.22±30%	0.011	0.009	9.00	12.00	5.30	6.00	R22
MNR5020TR47NT	0.47±30%	0.017	0.013	6.15	6.70	4.60	5.00	R47
MNR5020TR68NT	0.68±30%	0.022	0.017	5.50	6.00	4.00	4.40	R68
MNR5020T1R0MT	1.00±30%	0.026	0.019	4.10	5.00	3.80	4.10	1R0
MNR5020T1R5MT	1.50±30%	0.034	0.031	4.10	4.50	3.20	3.50	1R5
MNR5020T2R2MT	2.20±20%	0.042	0.036	3.20	4.00	2.90	3.10	2R2
MNR5020T3R3MT	3.30±20%	0.056	0.049	2.55	3.00	2.50	2.70	3R3
MNR5020T4R7MT	4.70±20%	0.074	0.063	2.50	2.70	2.20	2.40	4R7
MNR5020T6R8MT	6.80±20%	0.108	0.080	2.05	2.20	1.80	1.90	6R8
MNR5020T8R2MT	8.20±20%	0.127	0.116	1.85	2.00	1.65	1.80	8R2
MNR5020T100MT	10.0±20%	0.143	0.118	1.70	1.80	1.55	1.70	100
MNR5020T150MT	15.0±20%	0.215	0.164	1.35	1.40	1.25	1.30	150
MNR5020T220MT	22.0±20%	0.294	0.257	1.15	1.20	1.10	1.20	220
MNR5020T330MT	33.0±20%	0.520	0.472	0.92	1.00	0.90	1.00	330
MNR5020T470MT	47.0±20%	0.680	0.541	0.77	0.84	0.77	0.84	470
MNR5020T680MT	68.0±20%	0.962	0.910	0.65	0.70	0.64	0.70	680
MNR5020T101MT	100.0±20%	1.430	1.350	0.53	0.58	0.53	0.58	101
MNR5020S151MT	150.0±20%	2.150	1.630	0.35	0.40	0.30	0.35	151
MNR5020S221MT	220.0±20%	2.990	2.300	0.30	0.34	0.21	0.26	221
MNR5020S331MT	330.0±20%	4.350	3.350	0.22	0.25	0.22	0.25	331
MNR5020S471MT	470.0±20%	5.225	4.180	0.20	0.23	0.20	0.25	471

※1: All test data is referenced to 20°C ambient;
※2: Rated current: Isat or Irms, whichever is smaller;
※*3: Isat: DC current at which the inductance drops approximate 30% from its value without current;
※*4: Irms: DC current that causes the temperature rise (△T =40°C) from 20°C ambient.

RELIABILITY TEST			
No.	TEST ITEM	SPECIFICATION	TEST CONDITION
1	High temperature Storage test	1. No significant defects in appearance. 2.ΔL/L≦10% 3.ΔDCR/DCR≦10%	Temperature: 125℃±5℃ (N: Follow the product specification for the setting.) Time : 96±2 hours Place the samples for one hour at room temperature and test them within two hours
2	Low temperature Storage test	1. No significant defects in appearance. 2.ΔL/L≦10% 3.ΔDCR/DCR≦10%	Temperature: -40℃±5℃ (M: Follow the product specification for the setting) Time : 96±2 hours Place the samples for one hour at room temperature and test them within two hours.
3	Humidity test	1. No significant defects in appearance. 2.ΔL/L≦10% 3.ΔDCR/DCR≦10%	Temperature: 40±2℃ , Humidity: 93±3%RH Time : 96±2 hours Place the samples for one hour at room temperature and test them within two hours
4	Solderability test	Terminals must have 95% minimum solder coverage	1.Dip pads in flux then dip in solder pot at 245±5℃ for 5 second. 2.Solder: lead free 3.Flux: rosin flux
5	Heat endurance of flow soldering	1. No significant defects in appearance. 2.ΔL/L≦10% 3.ΔDCR/DCR≦10%	1.Refer to the above reflow curve and go through the reflow for twice. 2.The peak temperature : 260+0/-5℃
6	Vibration test	1.No significant defects in appearance. 2.No short and no open.	Apply frequency 10~55~10Hz and amplitude 1.5mm, 1 min/cycle in X ㄱY and Z direction for 2 hours each. (total 6 hours)
7	Terminal strength push test	1. Applied force:10N Duration: 10sec 2.Solder paste thickness:0.12mm 3.Meet the above requirements without any loose termina	Solder the test samples to the PCB through245 ℃ reflow, apply a standard force on the side of the test samples for 10 seconds. 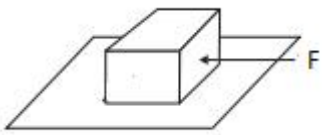

We have suggested the storage period of lead-free product should not over 6 months.

SOLDERING CONDITIONS

Applicable soldering process to the products is refl.

1 Soldering Materials

(1) Solder:Sn-3.0Ag-0.5Cu

(2) Flux:Use rosin-based flux,but not strongly acidic flux (with xhlorine exceeding 0.2wt%).Do not use water-soluble flux.

2 Reflow Soldering Profile

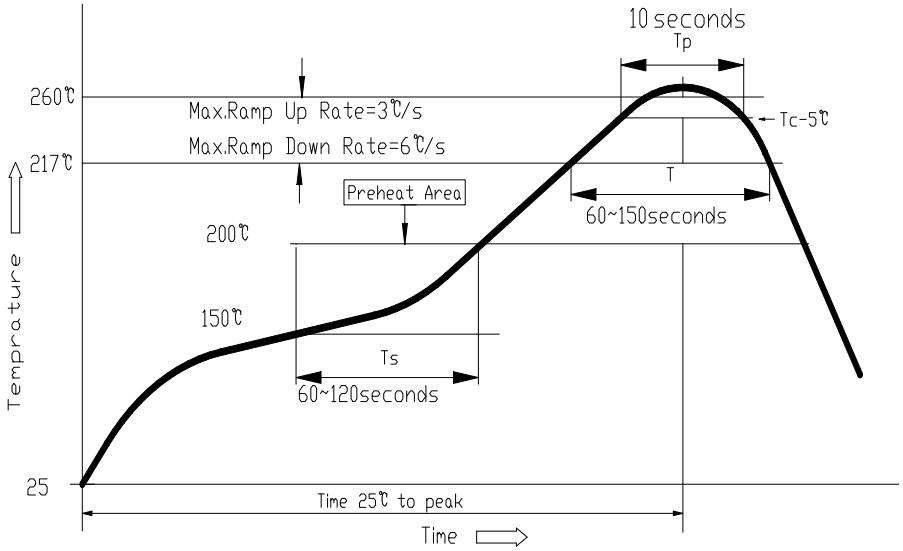

3 Soldering Iron

Reworking with electric solding iron must preheating at 150℃ for 1 minute is required,and do not directly touch the core with the tip of the soldering iron.The reworking soldering conditions are as follows.

①Temperature of soldering iron tip:350℃;

② Soldering iron power output:≤30W;

③ Diameter of soldering iron end:≤1.0mm;

④Soldering time:＜3 s



Structure (The structure of product.)

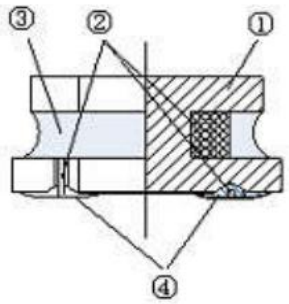

NO	Components	Material
①	Core	Ni-Zn Ferrite
②	Wire	Polyurethane system enameled copper wire
③	Magnetic Glue	Epoxy resin and magnetic powder
④	Plating	AgNiSn or FeNiCu + Sn Alloy

PACKAGING(unit: mm)

☑ 13″ 盘　　☐ 7″ 盘

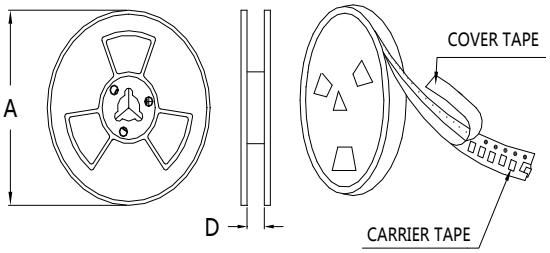

	13″ 盘	7″ 盘
A	Φ330±2.0	Φ178±2.0
D	12.5	

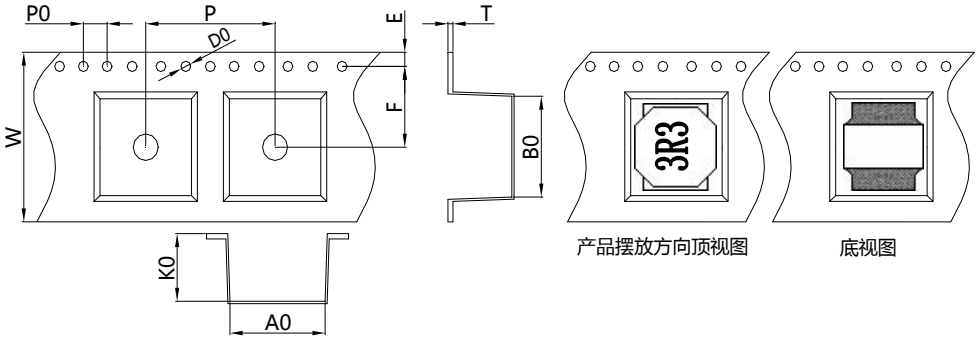

Size	Item	W	A0	B0	K0	P	T	E	F	D0	P0
5020	(mm)	12.0±0.3	5.5±0.3	5.5±0.3	2.4±0.2	8.0±0.3	0.4±0.1	1.75±0.1	5.5±0.1	1.5±0.1	4.0±0.2

Quantity：2500PCS/Reel