

钍地半导体
Tudi Semiconductor

# Product Specification

## TUDI-SN74LVC1G86

## Single 2-Input Exclusive-OR Gate

网址 www.sztdbdt.com

**用芯智造·卓越品质**

**semiconductor device manufacturer**

- Design
- research and development
- production
- and sales

## FEATURES

- Operating Voltage Range: 1.65V to 5.5V
- Low Power Consumption: 0.1μA (TYP)
- Operating Temperature Range: -40°C to +125°C
- Inputs Accept Voltage to 5.5V
- High Output Drive: ±24mA at $V_{cc}$=3.0V
- Micro SIZE PACKAGES: SOT23-5, SC70-5

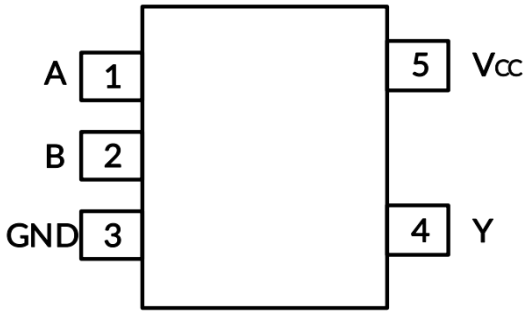

SOT23/SC70

## APPLICATIONS

- AV Receiver
- Blu-ray Player and Home Theater
- Digital Picture Frame (DPF)
- High-Speed Data Acquisition and Generation
- Personal Navigation Device (GPS)
- Portable Media Player

## DESCRIPTIONS

The SN74LVC1G86 single 2-input exclusive-OR gate is designed for 1.65V to 5.5V $V_{CC}$ operation. The SN74LVC1G86 device performs the Boolean function Y=AB+ AB in positive logic. The device is fully specified for partial-power-down applications using Ioff. The Ioff circuitry disables the outputs, preventing damaging current backflow through the device when it is powered down. The SN74LVC1G86 is available in Green SOT23-5 and SC70-5 packages. It operates over an ambient temperature range of -40°C to +125°C.

## LOGIC SYMBOL

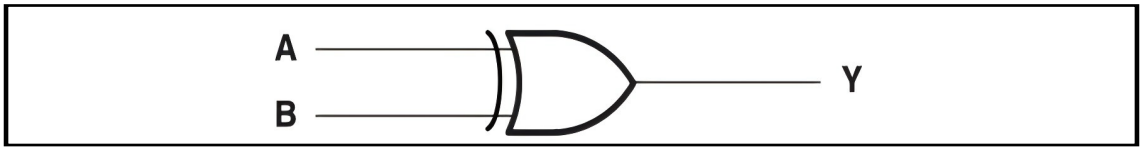


## IEE/IEC LOGIC SYMBOL

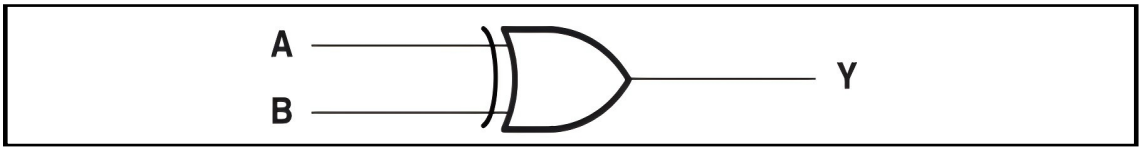


## FUNCTION TABLE

| INPUTS | | OUTPUT |
|---|---|---|
| A | B | Y |
| H | H | L |
| L | H | H |
| H | L | H |
| L | L | L |

H=High Voltage Level
L =Low Voltage Level

## PIN CONFIGURATION AND FUNCTIONS

| PIN | NAME | I/O | FUNCTION |
|---|---|---|---|
| 1 | A | I | Input A |
| 2 | B | I | Input B |
| 3 | GND | P | Ground |
| 4 | Y | O | Output Y |
| 5 | $V_{CC}$ | P | Power pin |

## Absolute Maximum Ratings

over operating free-air temperature range (unless otherwise noted) (1) (2)

| | | | MIN | MAX | UNIT |
|---|---|---|---|---|---|
| $V_{cc}$ | Supply voltage range | | -0.5 | 6.5 | V |
| $V_I$ | Input voltage range(2) | | -0.5 | 6.5 | V |
| $V_o$ | Voltage range applied to any output in the high-impedance or power-off state(2) | | -0.5 | 6.5 | V |
| $V_o$ | Voltage range applied to any output in the high orlow state (2)(3) | | -0.5 | $V_{cc}$+0.5 | V |
| $I_K$ | Input clamp current | $V_I$<0 | | -50 | mA |
| $I_{ok}$ | Output clamp current | $V_o$<0 | | -50 | mA |
| $I_o$ | Continuous output current | | | ±50 | mA |
| | Continuous current through $V_{cc}$ or GND | | | ±100 | mA |

## Package Thermal Impedance

| | PARAMETER | MIN | MAX | UNIT |
|---|---|---|---|---|
| $\theta_{JA}$ | Package thermal impedance (4) | SOT23-5<br>SC70-5 | 230<br>380 | °C/W |

## Temperature

| | PARAMETER | MIN | MAX | UNIT |
|---|---|---|---|---|
| Temperature | Junction temperature,$T_J$(5) | -65 | 150 | °C |
| | Storage temperature,$T_{stg}$ | -65 | 150 | |

## ESD Ratings

The following ESD information is provided for handling of ESD-sensitive devices in an ESD protected area only.

| | VALUE | UNIT |
|---|---|---|
| Human-Body Model(HBM) | ±8000 | V |
| Machine Model(MM) | ±500 | |

## ESD SENSITIVITY CAUTION

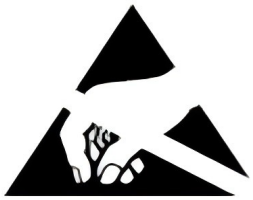

SD damage can range from subtle performance degradation to
omplete device failure. Precision integrated circuits may be
ore susceptible to damage because very small parametric
anges could cause the device not to meet its published
ecifications.

NOTE:
(1) Stresses beyond those listed under Absolute Maximum Ratings may cause permanent damage to the device. These are stress ratings only, and functional operation of the device at these or any other conditions beyond those indicated under Recommended Operating Conditions is not implied. Exposure to absolute-maximum-rated conditions for extended periods may affect device reliability.
(2) The input and output negative-voltage ratings may be exceeded if the input and output current ratings are observed.
(3) The value of $V_{CC}$ is provided in the Recommended Operating Conditions table.
(4) The package thermal impedance is calculated in accordance with JESD-51.
(5) The maximum power dissipation is a function of $T_{J(MAX)}$, $R_{\theta JA}$, and $T_A$. The maximum allowable power dissipation at any ambient temperature is $P_D = (T_{J(MAX)} - T_A) / R_{\theta JA}$. All numbers apply for packages soldered directly onto a PCB.

# ELECTRICAL CHARACTERISTICS

over recommended operating free-air temperature range (TYP values are at $T_A$ = +25°C, Full=-40° C to 125°C, unless otherwise noted.) (1)

## Recommended Operating Conditions

| PARAMETER | SYMBOL | TEST CONDITIONS | MIN | MAX | UNIT |
|---|---|---|---|---|---|
| Supply voltage | $V_{cc}$ | Operating | 1.65 | 5.5 | V |
| | | Data retention only | 1 . 5 | | |
| High-level input voltage | $V_{iH}$ | $V_{cc}$=1.65V to 1.95V | 0.65×$V_{cc}$ | | V |
| | | $V_{cc}$=2.3V to 2.7V | 1.7 | | |
| | | $V_{cc}$=3V to 3.6V | 2.2 | | |
| | | $V_{cc}$=4.5V to 5.5V | 0.7×$V_{cc}$ | | |
| Low-level input voltage | $V_L$ | $_{cc}$=1.65V to 1.95V | | 0.20×$V_{cc}$ | V |
| | | $V_{cc}$=2.3V to 2.7V | | 0.3 | |
| | | $V_{cc}$=3V to 3.6V | | 0.4 | |
| | | $V_{cc}$=4.5V to 5.5V | | 0.15×$V_{cc}$ | |
| Input voltage | $V_I$ | | 0 | 5.5 | V |
| Output voltage | $V_o$ | | 0 | $V_{cc}$ | V |
| Input transition rise or fall | $t_r$,$t_f$ | $V_{cc}$=1.8V±0.15V,2.5V±0.2V | | 20 | ns/V |
| | | $V_{cc}$=3.3V±0.3V | | 10 | |
| | | $V_{cc}$=5V±0.5V | | 5 | |
| Operating temperature | $T_A$ | | -40 | +125 | ℃ |

(1) All unused inputs of the device must be held at $V_{cc}$ or GND to ensure proper device operation.

## DC Characteristics

| PARAMETER | TEST CONDITIONS | $V_{cc}$ | TEMP | MIN(2) | TYP(3) | MAX(2) | UNIT |
|---|---|---|---|---|---|---|---|
| $V_{OH}$ | $I_{OH}$=-100μA | 1.65V to 5.5V | Full | $V_{cc}$-0.1 | | | V |
| | $I_{OH}$=-4mA | 1.65V | | 1.2 | | | |
| | $I_{OH}$=-8mA | 2.3V | | 1.9 | | | |
| | $I_{OH}$=-16mA | | | 2.4 | | | |
| | $I_{OH}$=-24mA | 3V | | 2.3 | | | |
| | $I_{OH}$=-32mA | 4.5V | | 3.8 | | | |
| $V_{OL}$ | $I_{OL}$=100μA | 1.65V to 5.5V | Full | | | 0.1 | V |
| | $I_{OL}$=4mA | 1.65V | | | | 0.45 | |
| | $I_{OL}$=8mA<br>$I_{OL}$=16mA | 2.3V | | | | 0.3<br>0.4 | |
| | $I_{OL}$=24mA | 3V | | | | 0.55 | |
| | $I_{OL}$=32mA | 4.5V | | | | 0.55 | |
| $I_I$ A or B inputs | $V_I$=5.5V or GND | 0V to 5.5V | +25℃ | | ± 0.1 | | μA |
| | | | Full | | | ±5 | |
| $I_{off}$ | $V_I$or$V_o$ =5.5V | 0V | +25℃ | | ± 0.1 | | μA |
| | | | Full | | | ±10 | |
| $I_{cc}$ | $V_I$=5.5Vor GND,$I_o$=0 | 1.65V to 5.5V | +25℃ | | 0.1 | | μA |
| | | | Full | | | 10 | |
| △$I_{cc}$ | One input at $V_{cc}$-0.6V,<br>Other inputs at $V_{cc}$ or GND | 3V to 5.5V | Full | | | 500 | μA |

(1) All unused inputs of the device must be held at $V_{CC}$ or GND to ensure proper device operation.
(2) Limits are 100% production tested at 25°C. Limits over the operating temperature range are ensured through correlations using statistical quality control (SQC) method.
(3) Typical values represent the most likely parametric norm as determined at the time of characterization. Actual typical values may vary over time and will also depend on the application and configuration.

## AC Characteristics

($T_A$ =-40°C to +125°C, typical values are at $T_A$ = +25°C, unless otherwise noted.) (1)

| PARAMETER | SYMBOL | TEST CONDITIONS | | MIN(2) | TYP(3) | MAX(2) | UNIT |
|---|---|---|---|---|---|---|---|
| Propagation Delay | $t_{pd}$ | $V_{CC}$=1.8V±0.15V | $C_L$=30pF,$R_L$=1kΩ | | 14.2 | | ns |
| | | $V_{CC}$=2.5V±0.2V | $C_L$=30pF,$R_L$=500Ω | | 11.1 | | |
| | | $V_{CC}$=3.3V±0.3V | $C_L$=50pF,$R_L$=500Ω | | 6.7 | | |
| | | $V_{CC}$=5V±0.5V | $C_L$=50pF,$R_L$=500Ω | | 5.3 | | |
| Input Capacitance | $C_i$ | $V_{CC}$=3.3V | $V_I$=$V_{CC}$ or GND | | 4 | | pF |
| Power dissipation capacitance | $C_{pd}$ | $V_{CC}$=1.8V | f=10MHz | | 20 | | pF |
| | | $V_{CC}$=2.5V | | | 21 | | |
| | | $V_{CC}$=3.3V | | | 22 | | |
| | | $V_{CC}$=5V | | | 25 | | |

(1) All unused inputs of the device must be held at $V_{CC}$ or GND to ensure proper device operation.
(2) This parameter is ensured by design and/or characterization and is not tested in production.
(3) Typical values represent the most likely parametric norm as determined at the time of characterization. Actual typical values may vary over time and will also depend on the application and configuration.

## PARAMETER MEASUREMENT INFORMATION

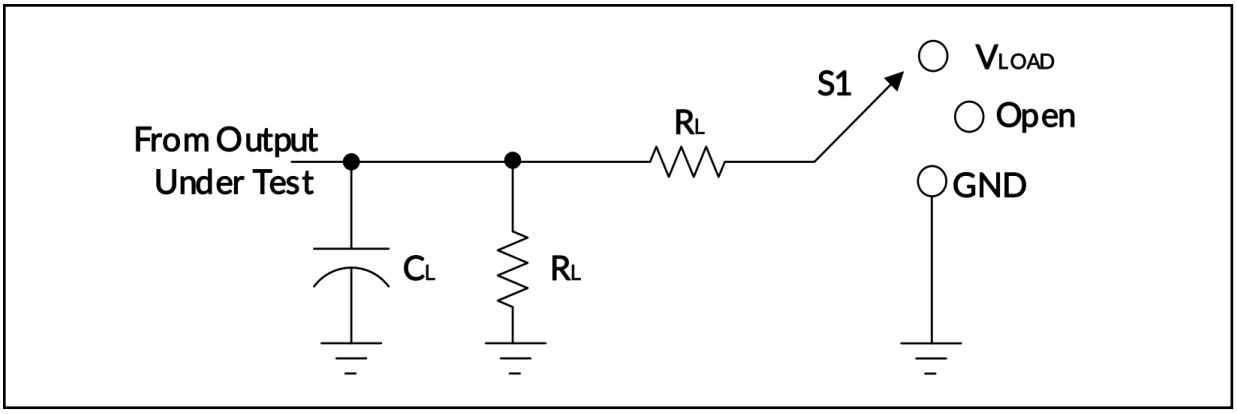

| TEST | S1 |
|---|---|
| $t_{PLH}/t_{pHL}$ | Open |
| $t_{pLz}/t_{pzL}$ | $V_{LOAD}$ |
| $t_{pHz}/t_{pZH}$ | GND |

## INPUTS

| $V_{cc}$ | $V_I$ | $t_r/t_f$ | $V_M$ | $V_{LOAD}$ | $C_L$ | $R_L$ | $V_\triangle$ |
|---|---|---|---|---|---|---|---|
| 1.8V±0.15V | $V_{cc}$ | ≤2ns | $V_{cc}/2$ | $2\times V_{cc}$ | 30pF | 1kΩ | 0.15V |
| 2.5V±0.2V | $V_{cc}$ | ≤2ns | $V_{cc}/2$ | $2\times V_{cc}$ | 30pF | 500Ω | 0.15V |
| 3.3V±0.3V | 3V | ≤2.5ns | 1.5V | 6V | 50pF | 500Ω | 0.3V |
| 5V±0.5V | $V_{cc}$ | ≤2.5ns | $V_{cc}/2$ | $2\times V_{cc}$ | 50pF | 500Ω | 0.3V |

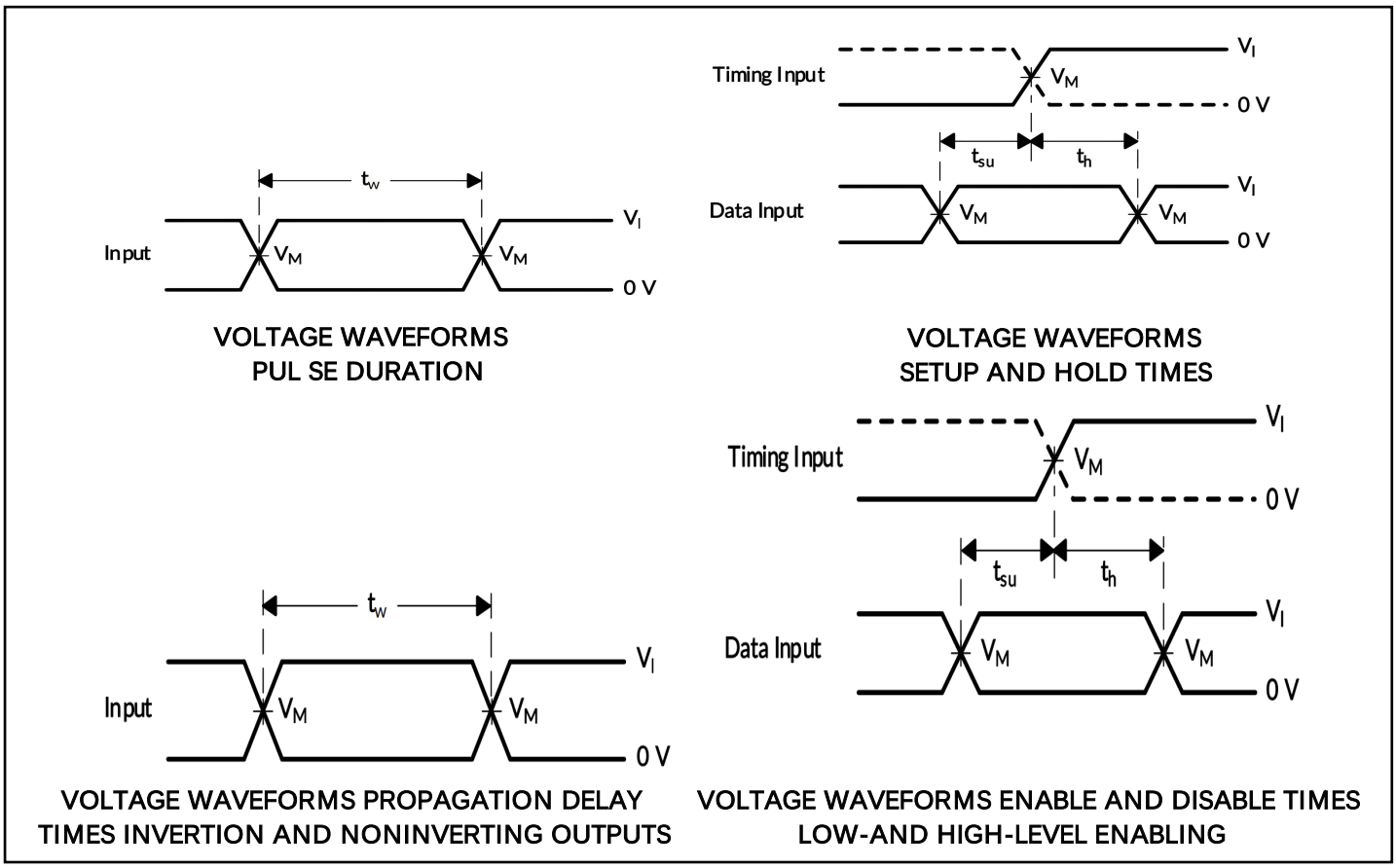


Figure 1. Load Circuit and Voltage Waveforms

NOTES: A. $C_L$ includes probe and jig capacitance.
B. Waveform 1 is for an output with internal conditions such that the output is low, except when disabled by the output control.Waveform 2 is for an output with internal conditions such that the output is high, except when disabled by the output control.
C. All input pulses are supplied by generators having the following characteristics: PRR ≤ 10 MHz, $Z_O$ = 50 Ω.
D. The outputs are measured one at a time, with one transition per measurement.
E. $t_{PLZ}$ and $t_{PHZ}$ are the same as $t_{dis}$.
F. $t_{PZL}$ and $t_{PZH}$ are the same as $t_{en}$.
G. $t_{PLH}$ and $t_{PHL}$ are the same as $t_{pd}$.
H. All parameters and waveforms are not applicable to all devices.

# Order information

| Order Number | Package | Package Quantity | Marking On The park | Temperature |
|---|---|---|---|---|
| SN74LVC1G86DCKR-TUDI | SC70-5 | Tape,Reel,3000 | CH5 | -40°C~125°C |
| SN74LVC1G86DBVR-TUDI | SOT23-5 | Tape,Reel,3000 | C86J | |

# Revision history

| | Date | Revision | Page |
|---|---|---|---|
| V1.0 | 2018/4/4 | New | 1-14 |

# Package SOT23-5

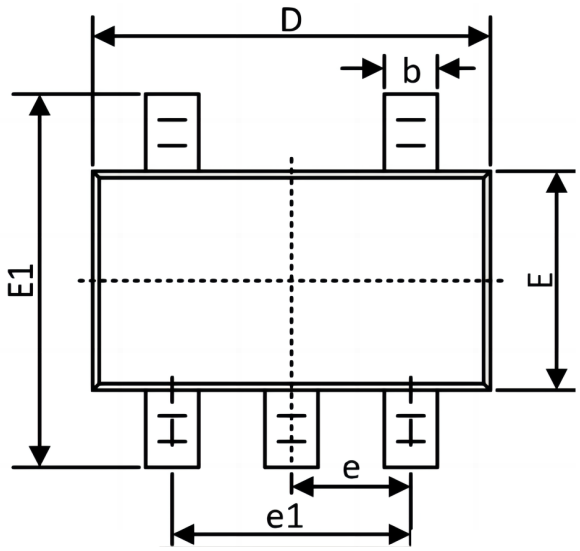


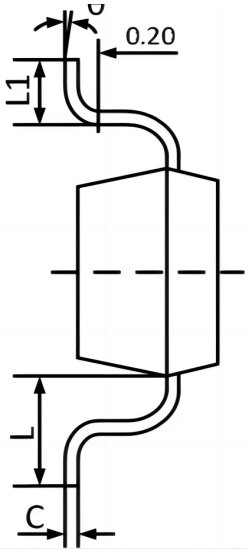


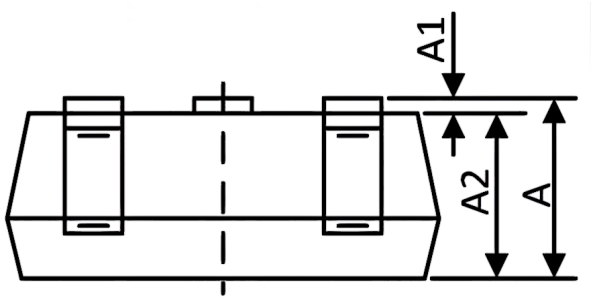


| Symbol | Dimensions In Millimeters | | Dimensions In Inches | |
|---|---|---|---|---|
| | MIN | MAX | MIN | MAX |
| A | 1.050 | 1.250 | 0.041 | 0.049 |
| A1 | 0.000 | 0.100 | 0.000 | 0.004 |
| A2 | 1.050 | 1.150 | 0.041 | 0.045 |
| b | 0.300 | 0.400 | 0.012 | 0.016 |
| C | 0.100 | 0.200 | 0.004 | 0.008 |
| D | 2.820 | 3.020 | 0.111 | 0.119 |
| E | 1.500 | 1.700 | 0.059 | 0.067 |
| E1 | 2.650 | 2.950 | 0.104 | 0.116 |
| e | 0.950TYP | | 0.037TYP | |
| e1 | 1.800 | 2.000 | 0.071 | 0.079 |
| L | 0.700REF | | 0.028REF | |
| L1 | 0.300 | 0.600 | 0.012 | 0.024 |
| θ | 0° | 8° | 0° | 8° |

# Package SC70-5

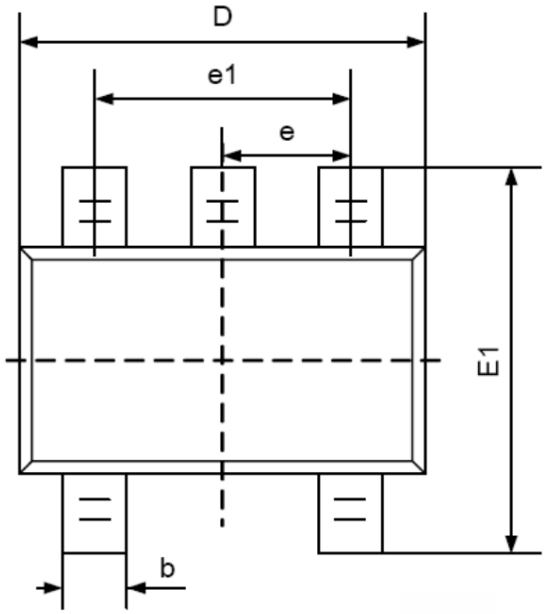


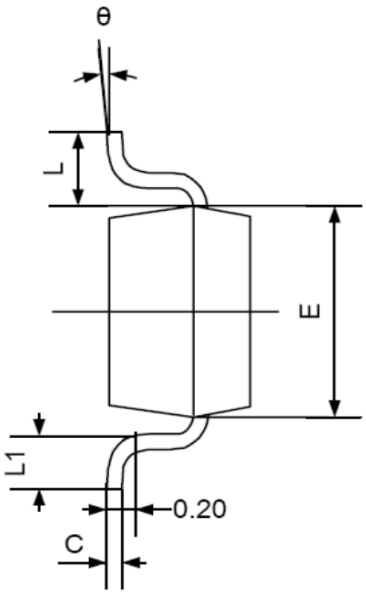


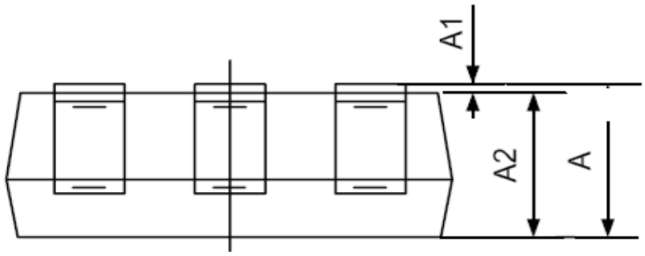


| Symbol | DimensionsIn Millimeters | | DimensionsIn Inches | |
|---|---|---|---|---|
| | Min | Max | Min | Max |
| A | 0.900 | 1.100 | 0.035 | 0.043 |
| A1 | 0.000 | 0.100 | 0.000 | 0.004 |
| A2 | 0.900 | 1.000 | 0.035 | 0.039 |
| b | 0.150 | 0.350 | 0.006 | 0.014 |
| C | 0.080 | 0.150 | 0.003 | 0.006 |
| D | 2.000 | 2.200 | 0.079 | 0.087 |
| E | 1.150 | 1.350 | 0.045 | 0.053 |
| E1 | 2.150 | 2.450 | 0.085 | 0.096 |
| e | 0.650TYP | | 0.026TYP | |
| e1 | 1.200 | 1.400 | 0.047 | 0.055 |
| L | 0.525REF | | 0.021REF | |
| L1 | 0.260 | 0.460 | 0.010 | 0.018 |
| θ | 0° | 8° | 0° | 8° |

## Important statement:

●TUDI Semiconductor reserves the right to modify the product manual without prior notice! Before placing an order, customers need to confirm whether the obtained information is the latest version and verify the completeness of the relevant information.

●Any semi-guide product is subject to failure or malfunction under specified conditions. It is the buyer's responsibility to comply with safety standards when using TUDI Semiconductor products for system design and whole machine manufacturing.And take the appropriate safety measures to avoid the potential in the risk of loss of personal injury or loss of property situation!

●TUDI Semiconductor products have not been licensed for life support, military, and aerospace applications,and therefore TUDI Semiconductor is not responsible for any consequences arising from the use of this product in these areas.

●If any or all TUDI Semiconductor products (including technical data, services) described or contained in this document are subject to any applicable local export control laws and regulations, they may not be exported without an export license from the relevant authorities in accordance with such laws.

●The specifications of any and all TUDI Semiconductor products described or contained in this document specify the performance, characteristics, and functionality of said products in their standalone state, but do not guarantee the performance, characteristics, and functionality of said products installed in Customer's products or equipment. In order to verify symptoms and conditions that cannot be evaluated in a standalone device, the Customer should ultimately evaluate and test the device installed in the Customer's product device.

●TUDI Semiconductor documentation is only allowed to be copied without any alteration of the content and with the relevant authorization.TUDI Semiconductor assumes no responsibility or liability for altered documents.

●TUDI Semiconductor is committed to becoming the preferred semiconductor brand for customers, and TUDI Semiconductor will strive to provide customers with better performance and better quallity products.