

钍地半导体
Tudi Semiconductor

Product Specification

TUDI-SN74LVC1G04

Single Inverter Gate

网址 www.sztdbdt.com

用芯智造·卓越品质

semiconductor device manufacturer

- Design
- research and development
- production
- and sales

FEATURES

- Operating Voltage Range: 1.65V to 5.5V
- Low Power Consumption: 0.1μA (TYP)
- Operating Temperature Range: -40 ° C to 125 ° C
- Input Accept Voltage to 5.5V
- High Output Drive: ±24mA at V_{CC}=3.0V
- I_{off} Supports Partial-Power-Down Mode Operation
- Micro Size Packages: SOT23-5, SC70-5,

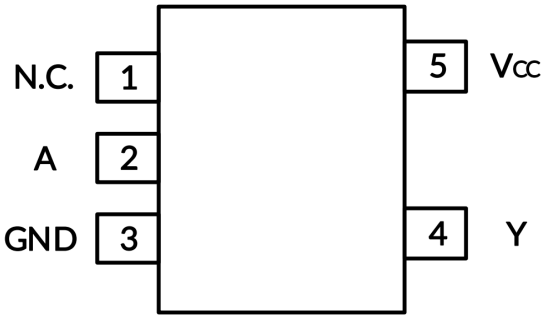

SOT23-5/SC70-5

APPLICATIONS

- AC Receiver
- Blu-ray Players and Home Theaters
- Desktops or Notebook PCs
- Digital Video Cameras (DVC)
- Mobile Phones
- Personal Navigation Device (GPS)
- Portable Media Player

DESCRIPTIONS

The SN74LVC1G04 Single inverter gate is designed for 1.65V to 5.5V V_{CC} operation.
The SN74LVC1G04 device performs the Boolean function Y=A.
The CMOS device has high output drive while maintaining low static power dissipation over a broad V_{CC} operating range.
The SN74LVC1G04 is available in Green SOT23-5 and SC70-5 packages. It operates over an ambient temperature range of -40 ° C to 125 ° C.

FUNCTIONALBLOCK DIAGRAM

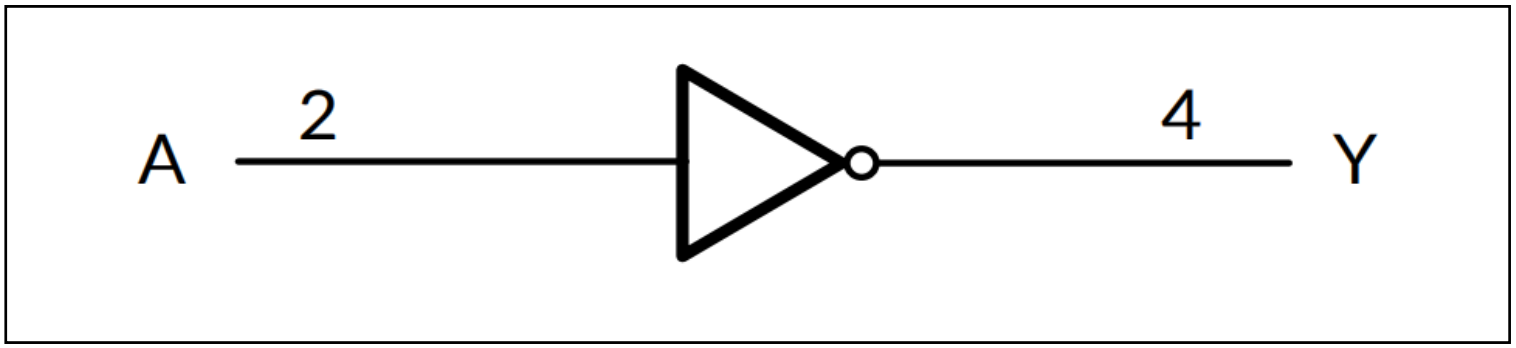

FUNCTION TABLE

INPUT	OUTPUT
A	Y
H	L
L	H

Y=A
H=High Voltage Level
L=Low Voltage Leve

PIN CONFIGURATION AND FUNCTIONS (TOP VIEW)

PIN	NAME	I/O	FUNCTION
1	N.C.	-	Not connected
2	A	I	Input
3	GND	P	Ground
4	Y	O	Output
5	V_{CC}	P	Power Pin

Absolute Maximum Ratings

over operating free-air temperature range (unless otherwise noted) (1) (2)

		MIN	MAX	UNIT
V_{CC}	Supply voltage range	-0.5	6.5	V
V_I	Input voltage range(2)	-0.5	6.5	V
V_O	Voltage range applied to any output in the high-impedance orpower-off state(2)	-0.5	6.5	V
V_O	Voltage range applied to any output in the high orlow state (2)(3)	-0.5	V_{CC}+0.5	V
I_{IK}	Input clamp current V_I <0		-50	mA
I_{OK}	Output clamp current V_O<0		-50	mA
I_O	Continuous output current		±50	mA
	Continuous current through V_{CC} or GND		±100	mA

Package Thermal Impedance

	PARAMETER		MIN	MAX	UNIT
θ_{JA}	Package thermal impedance(4)	SOT23-5 SC70-5		230 380	°C/W

Temperature

	PARAMETER	MIN	MAX	UNIT
Temperature	Junction temperature,T_J(5)	-65	150	°C
	Storage temperature,T_{stg}	-65	150	

ESD Ratings

The following ESD information is provided for handling of ESD-sensitive devices in an ESD protected area only.

	VALUE	UNIT
Human-Body Model(HBM)	±4000	V
Charged-Device Model (CDM)	±1500	
Machine Model(MM)	±200	

ESD SENSITIVITY CAUTION



ESD damage can range from subtle performance degradation to complete device failure. Precision integrated circuits may be more susceptible to damage because very small parametric changes could cause the device not to meet its published specifications.

NOTE:
(1) Stresses beyond those listed under Absolute Maximum Ratings may cause permanent damage to the device. These are stress ratings only, and functional operation of the device at these or any other conditions beyond those indicated under Recommended Operating Conditions is not implied. Exposure to absolute-maximum-rated conditions for extended periods may affect device reliability.
(2) The input and output negative-voltage ratings may be exceeded if the input and output current ratings are observed.
(3) The value of V_{CC} is provided in the Recommended Operating Conditions table.
(4) The package thermal impedance is calculated in accordance with JESD-51.
(5) The maximum power dissipation is a function of $T_{J(MAX)}$, $R_{\theta JA}$, and T_A. The maximum allowable power dissipation at any ambient temperature is $P_D = (T_{J(MAX)} - T_A) / R_{\theta JA}$. All numbers apply for packages soldered directly onto a PCB.

ELECTRICAL CHARACTERISTICS

over recommended operating free-air temperature range (Full=-40 ° C to +125 ° C, typical values are at T_A = +25 ° C, unless otherwise noted.) (1)

Recommended Operating Conditions

PARAMETER	SYMBOL	TEST CONDITIONS	MIN	MAX	UNIT
Supply Voltage	V_{cc}	Operating	1.65	5.5	V
		Data retention only	1.5		
High-Level Input Voltage	V_{IH}	V_{cc} = 1.65V to 1.95V	0.65 xV_{cc}		V
		V_{cc} = 2.3 V to 2.7V	1.7		
		V_{cc}= 3 V to 3.6V	2		
		V_{cc} = 4.5 V to 5.5V	0.7 x V_{cc}		V
Low-Level Input Voltage	V_{IL}	V_{cc} = 1.65V to 1.95V		0.35 xV_{cc}	
		V_{cc} = 2.3 V to 2.7V		0.7	
		V_{cc} = 3 V to 3.6V		0.8	
		V_{cc} = 4.5 V to 5.5V		0.3 x V_{cc}	
Input Voltage	V_I		0	5.5	V
Output Voltage	N_o		0	5.5	V
Input Transition Rise or Fall	△t/△v	V_{cc}=1.8V±0.15V,2.5V±0.2V		20	ns/V
		V_{cc}=3.3V±0.3V		10	
		V_{cc}=5V±0.5V		5	
Operating Temperature	T_A		-40	+125	℃

(1) All unused inputs of the device must be held at V_{cc} or GND to ensure proper device operation.

DC Characteristics

PARAMETER	TEST CONDITIONS	V_{cc}	TEMP	MIN(2)	TYP(3)	MAX(2)	UNIT
V_{OH}	I_{OH}=-100μA	1.65V to 5.5V	Full	V_{cc}-0.1			V
	I_{OH}=-4mA	1.65V		1.2			
	I_{OH}=-8mA	2.3V		1.9			
	I_{OH}=-16 mA			2.4			
	I_{OH}=-24 mA	3V		2.3			
	I_{OH}=-32 mA	4.5V		3.8			
V_{OL}	I_{OL}=100μA	1.65V to 5.5V	Full			0.1	V
	I_{OL}=4 mA	1.65V				0.45	
	I_{OL}=8mA	2.3V				0.3	
	I_{OL}=16 mA					0.4	
	I_{OL}=24 mA	3V				0.55	
	I_{OL}=32 mA	4.5V				0.55	
I_I A input	V_I=5.5V or GND	0V to 5.5V	+25 °C		± 0.1		μA
			Full			±5	
I_{off}	V_I or V_O=5.5V	0	+25°C		±0.1		μA
			Full			±10	
I_{cc}	V_I=5.5V or GND,I_O=0	1.65V to 5.5V	+25 °C		0.1		μA
			Full			10	
Δ I_{cc}	One input at V_{cc}-0.6V, Other inputs at V_{cc} or GND	3V to 5.5V	Full			500	μA
Input Capacitance(C_i)	V_I=V_{cc} or GND	3.3V	+25°C		4		pF

(1) All unused inputs of the device must be held at V_{CC} or GND to ensure proper device operation.
(2) Limits are 100% production tested at 25°C. Limits over the operating temperature range are ensured through correlations using statistical quality control (SQC) method.
(3) Typical values represent the most likely parametric norm as determined at the time of characterization. Actual typical values may vary over time and will also depend on the application and configuration.

AC Characteristics

PARAMETER	SYMBOL	TEST CONDITIONS		MIN(2)	TYP(3)	MAX(2)	UNIT
Propagation Delay	t_{pd}	V_{CC}=1.8V±0.15V	C_L=30pF,R_L=1K2		13.0		ns
		V_{CC}=2.5V±0.2V	C_L=30pF,R_L=500Ω		5.1		
		V_{CC}=3.3V±0.3V	C_L=50pF,R_L=500Ω		4.2		
		V_{CC}=5V±0.5V	C_L=50pF,R_L=500Ω		3.3		
		V_{CC}=1.8V			16		
Power Dissipation Capacitance	C_{pd}	V_{CC}=2.5V			18		pF
		V_{CC}=3.3V	f=10MHz		18		
		V_{CC}=5V			20		

(1) All unused inputs of the device must be held at V_{CC} or GND to ensure proper device operation.
(2) This parameter is ensured by design and/or characterization and is not tested in production.
(3) Typical values represent the most likely parametric norm as determined at the time of characterization. Actual typical values may vary over time and will also depend on the application and configuration.

PARAMETER MEASUREMENT INFORMATION

Open-Drain

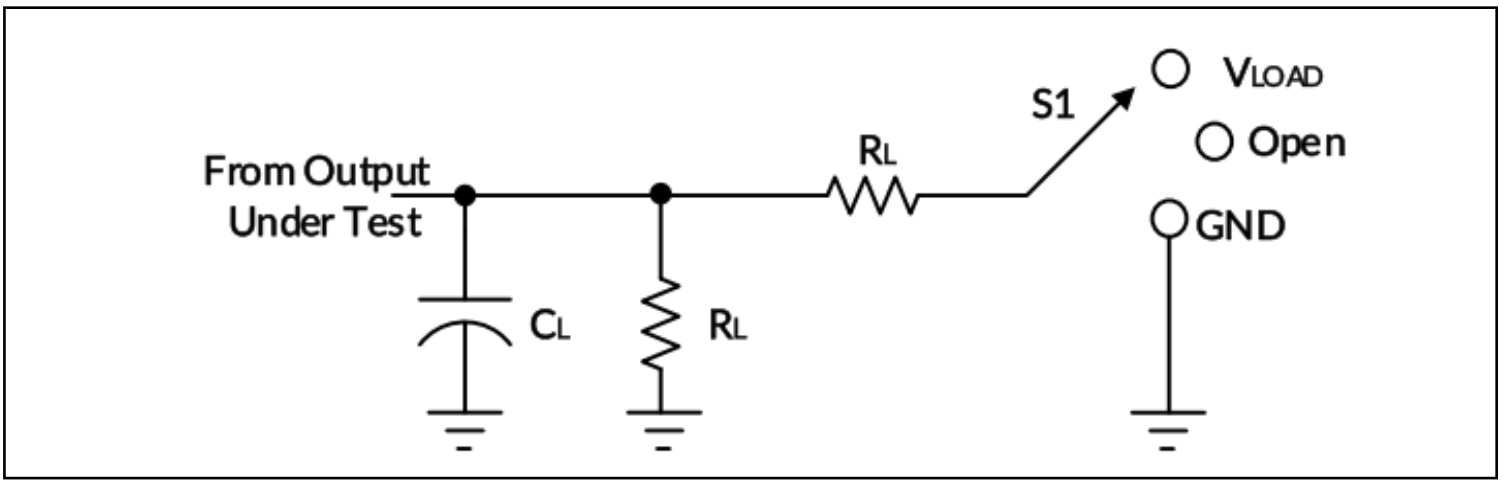

TEST	S1
t_{PLH}/t_{PHL}	Open
t_{PIZ}/t_{pzL}	V_{LOAD}
t_{PHZ}/t_{PZH}	GND

INPUTS

V_{cc}	V_I	t_r/t_f	V_M	V_{LOAD}	C_L	R_L	$V\Delta$
1.8V±0.15V	V_{cc}	2ns	$V_{cc}/2$	$2\times V_{cc}$	30pF	1kΩ	0.15V
2.5V±0.2V	V_{cc}	2ns	$V_{cc}/2$	$2\times V_{cc}$	30pF	500Ω	0.15V
3.3V±0.3V	3V	2.5ns	1.5V	6V	50pF	500Ω	0.3V
5V±0.5V	V_{cc}	2.5ns	$V_{cc}/2$	2xV_{cc}	50pF	500Ω	0.3V

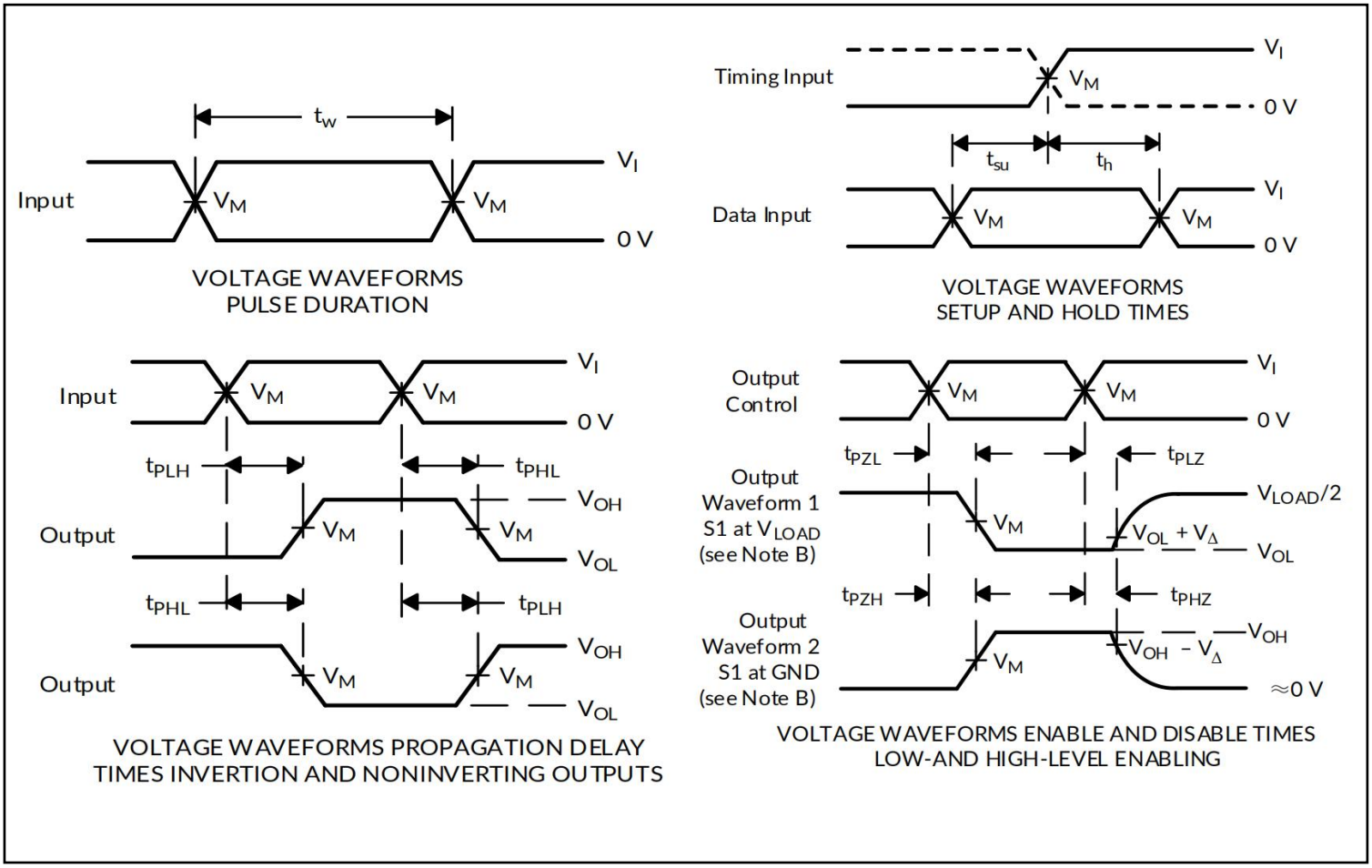

Figure 1. Load Circuit and Voltage Waveforms

NOTES: A. C_L includes probe and jig capacitance.
B. Waveform 1 is for an output with internal conditions such that the output is low, except when disabled by the output control.
Waveform 2 is for an output with internal conditions such that the output is high, except when disabled by the output control.
C. All input pulses are supplied by generators having the following characteristics: PRR $\leq$ 10 MHz, Z_O = 50 Ω.
D. The outputs are measured one at a time, with one transition per measurement.
E. t_{PLZ} and t_{PHZ} are the same as t_{dis}.
F. t_{PZL} and t_{PZH} are the same as t_{en}.
G. t_{PLH} and t_{PHL} are the same as t_{pd}
H. All parameters and waveforms are not applicable to all devices.

Order information

Order Number	Package	Package Quantity	Marking On The park	Temperature
SN74LVC1G04DCKR-TUDI	SC70-5	Tape,Reel,3000	CCF	-40°C~125°C
SN74LVC1G04DBVR-TUDI	SOT23-5	Tape,Reel,3000	C04F	

Revision history

Revison Number	Date	Revision	Page
V1.0	2018/7/10	New	1-14

Package SOT23-5

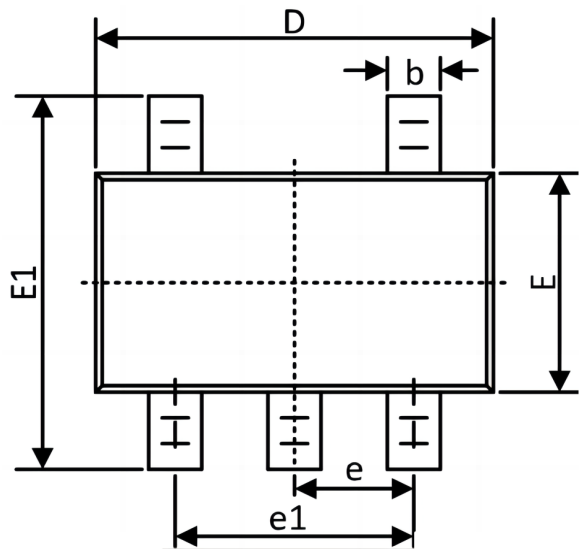

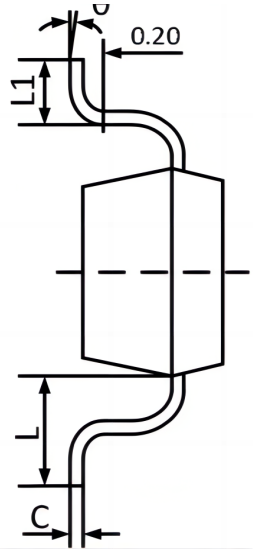

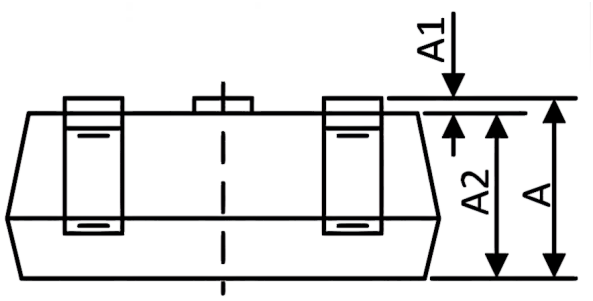

Symbol	Dimensions In Millimeters		Dimensions In Inches	
	MIN	MAX	MIN	MAX
A	1.050	1.250	0.041	0.049
A1	0.000	0.100	0.000	0.004
A2	1.050	1.150	0.041	0.045
b	0.300	0.400	0.012	0.016
C	0.100	0.200	0.004	0.008
D	2.820	3.020	0.111	0.119
E	1.500	1.700	0.059	0.067
E1	2.650	2.950	0.104	0.116
e	0.950TYP		0.037TYP	
e1	1.800	2.000	0.071	0.079
L	0.700REF		0.028REF	
L1	0.300	0.600	0.012	0.024
θ	0°	8°	0°	8°

Package SC70-5

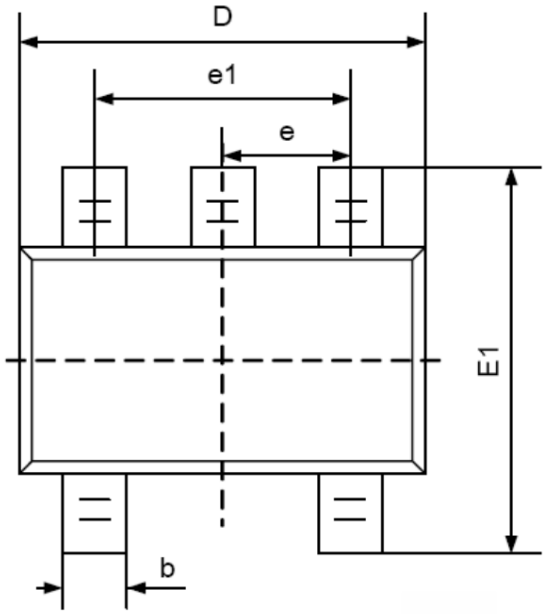

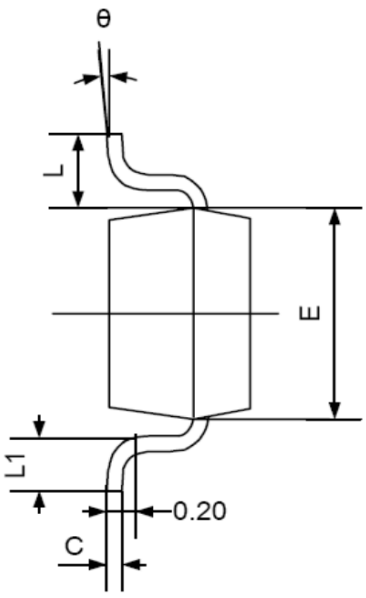

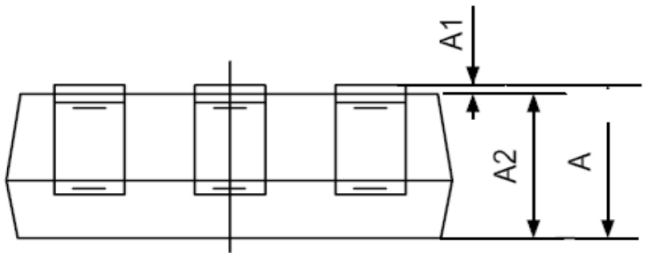

Symbol	DimensionsIn Millimeters		DimensionsIn Inches	
	Min	Max	Min	Max
A	0.900	1.100	0.035	0.043
A1	0.000	0.100	0.000	0.004
A2	0.900	1.000	0.035	0.039
b	0.150	0.350	0.006	0.014
C	0.080	0.150	0.003	0.006
D	2.000	2.200	0.079	0.087
E	1.150	1.350	0.045	0.053
E1	2.150	2.450	0.085	0.096
e	0.650TYP		0.026TYP	
e1	1.200	1.400	0.047	0.055
L	0.525REF		0.021REF	
L1	0.260	0.460	0.010	0.018
θ	0°	8°	0°	8°

Important statement:

●TUDI Semiconductor reserves the right to modify the product manual without prior notice! Before placing an order, customers need to confirm whether the obtained information is the latest version and verify the completeness of the relevant information.

●Any semi-guide product is subject to failure or malfunction under specified conditions. It is the buyer's responsibility to comply with safety standards when using TUDI Semiconductor products for system design and whole machine manufacturing.And take the appropriate safety measures to avoid the potential in the risk of loss of personal injury or loss of property situation!

●TUDI Semiconductor products have not been licensed for life support, military, and aerospace applications,and therefore TUDI Semiconductor is not responsible for any consequences arising from the use of this product in these areas.

●If any or all TUDI Semiconductor products (including technical data, services) described or contained in this document are subject to any applicable local export control laws and regulations, they may not be exported without an export license from the relevant authorities in accordance with such laws.

●The specifications of any and all TUDI Semiconductor products described or contained in this document specify the performance, characteristics, and functionality of said products in their standalone state, but do not guarantee the performance, characteristics, and functionality of said products installed in Customer's products or equipment. In order to verify symptoms and conditions that cannot be evaluated in a standalone device, the Customer should ultimately evaluate and test the device installed in the Customer's product device.

●TUDI Semiconductor documentation is only allowed to be copied without any alteration of the content and with the relevant authorization.TUDI Semiconductor assumes no responsibility or liability for altered documents.

●TUDI Semiconductor is committed to becoming the preferred semiconductor brand for customers, and TUDI Semiconductor will strive to provide customers with better performance and better quallity products.