REV.	ZONE	DESCRIPTION	DESIGN	DATE
B		NEW		

RoHS Compliant
Process Capable

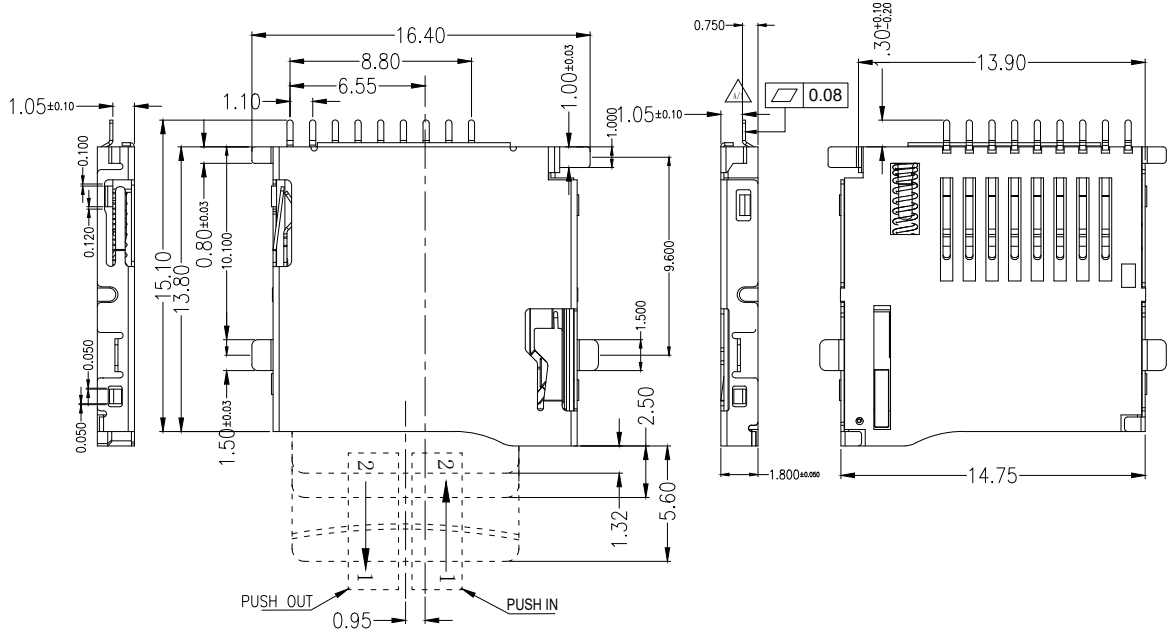

NOTES:
1.MATERIAL:
HOUSING: HIGH TEMPERATURE THERMOPLASTIC UL94V_0,COLOR:BLACK.
CONTACT: COPPER ALLOYS.
COVER: COPPER ALLOYS OR STEEL.
2.PLATING:
UNDERPLATE: NICKEL.
CONTACT AREA: GOLD OVER NICKEL.
SOLDER AREA: TIN OVER NICKEL.
3.MULTIMEDIA CARD COMPATIBLE

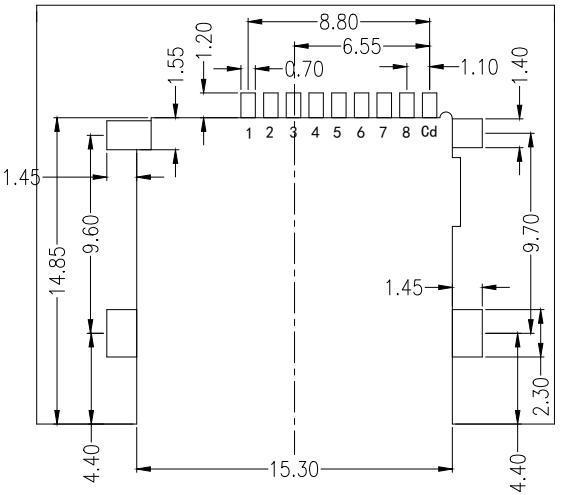

RECOMMENDED P.C.B HOLE LAYOUT
COMPONENT SIDE VIEW(TOLERANCE: +/−0.05)

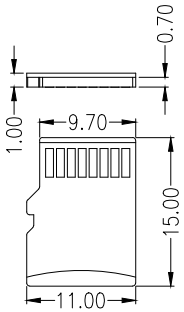

T−Flash Crad

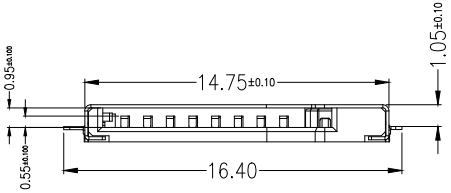

PIN NO.	NAME	YTPE	DESCRIPTION
1	DAT2	I/O/PP	DATE LINE(BIT2)
2	CD/DAT3	I/O/PP	CARD DETECT DATE LIN(BIT3)
3	CMD	PP	COMMAND RESPONSE
4	VDD	S	SUPPLY VOLTAGE
5	CLX	I	CLOCK
6	VSS	S	SUPPLY VOLTAGE GROUND
7	DATO	I/O/PP	DATE LINE(BITO)
8	DAT1	I/O/PP	DATE LINE(DIT1)

X.	±0.50	X.°	± 2°
.X	±0.30	.X°	± 1°
.XX	±0.10	.XX°	± 0.5°
.XXX	± 0.05		

UNITS mm
MAT'L
FINISH
Q'TY

THESE DRAWINGS AND SPECIFICATIONS ARE THE PROPERTY OF SHENZHEN CHUANGYUE TECHNOLOGY CO.,LTD. AND SHALL NOT BE REPRODUCED, COPIED OR USED IN ANY MANNER WITHOUT THE PRIOR WRITTEN CONSENT OF SHENZHEN CHUANGYUE TECHNOLOGY CO., LTD

广东创粤科技有限公司

TITLE: TF 外焊沉板自弹卡座 外壳镀镍端子刷金1U

TF-1U1.8H-30210

DWG NO.:

CHKD:

DR:

SCALE	SHEET	REV.
1/1	1/1	A1