RoHS Compliant

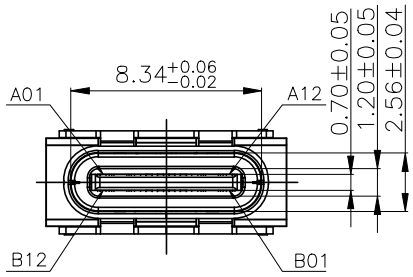

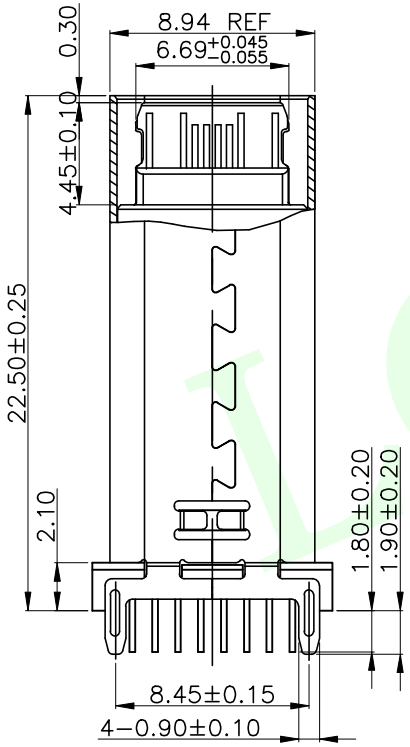

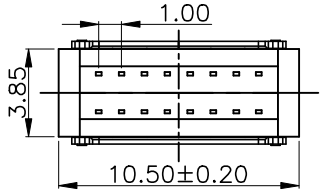

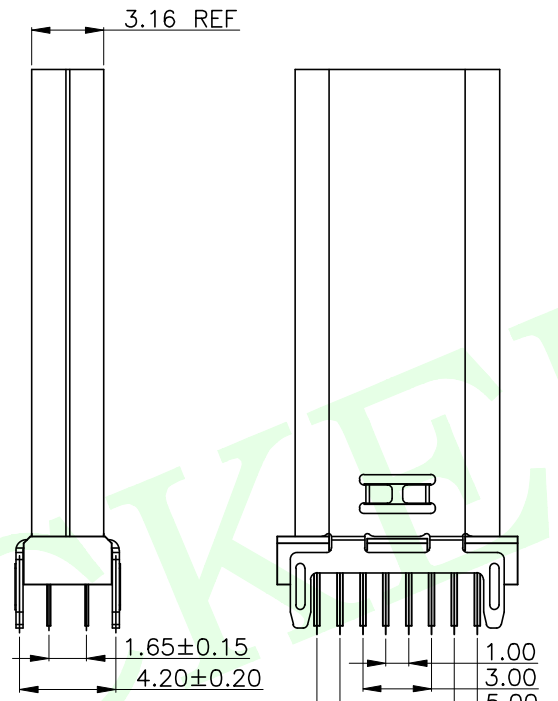

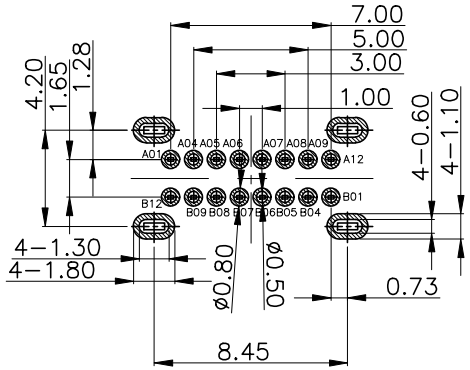

RECOMMENDED P.C.B. LAYOUT (俯视图)

TOLERANCE UNSPECIFIED ±0.05mm

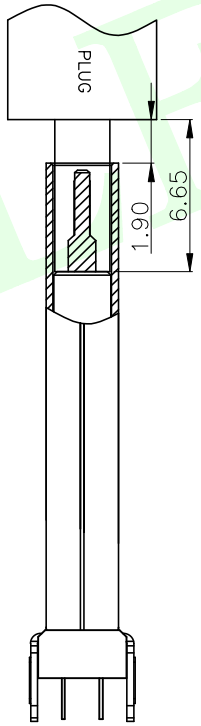

AFTER MATING

SPECIFICATION:

1、ELECTRICAL:
- 1.1 CURRENT RATING:5A;
- 1.2 CONTACT RESISTANCE:40mΩ Max;
- 1.3 DIELECTRIC WITHSTANDING VOLTAGE:100V AC;
- 1.4 INSULATION RESISTANCE:100 MΩ MIN;

2、MECHANICAL;
- 2.1 MATING FORCE:5~20N;
- 2.2 UNMATING FORCE:8~20N;
- 2.3 DURABILITY:10000 CYCLES;6~20N AFTER DURABILITY TEST;

3、MATERIAL:
- 3.1 HOUSING&MOLDING:BLACK LCP UL94V−0;
- 3.2 TERMINAL:C7025 T=0.15mm;
- 3.3 SHELL:SUS304 T=0.30mm;
- 3.4 MID PLATE:SUS304 T=0.15mm;

4、PLATING SPECIFICATION:
- 4.1 TERMINAL:CONTACT POINT GOLD PLATED 3u "Min PIN WELDING AREA GOLD PLATED 1u" Min.
- 4.2 NI 40U" Min. UNDER PLATED OVER ALL.
- 4.2 SHELL:PLATED Ni 50u" MIN(Salt spray 48H)

5、ELECTROPLATED PRODUCTS NEED TO UNDERGO TIN ADHESION TESTING: THE TIN ADHESION AREA SHOULD REACH OVER 95%.

6、SMT REFLOW SOLDERING (PEAK VALUE 260 °C ± 5 ° C) SHALL BE FREE OF BLISTERING, GLUE MELTING AND POOR COLOR CHANGE (DEFORMATION WITHIN TOLERANCE)

7、OPERATING TEMPERATURE: −40°C~+85°C

A1	GND	B12	GND
A4	VBUS	B9	VBUS
A5	CC1	B8	SBU2
A6	D+	B7	Dn2
A7	D−	B6	Dp2
A8	SBU1	B5	CC2
A9	VBUS	B4	VBUS
A12	GND	B1	GND
PIN	SIGNAL NAME	PIN	SIGNAL NAME

QUADRANT POINT (QP)
TANGERCY POINT (TP)
INTERSECTION POINT (IP)

UNLESS OTHERWISE SPECIFIED,TOLERANCE:
X. ±0.25
X.x ±0.20
X.xx ±0.15
ANGULAR ±3°

联晟欣连接器（深圳）有限公司
Lianshengxin Connector (Shenzhen) Co., Ltd

DESIGN	Andy	DATE	2014.12.24
CHECKED		DATE	
APPROVED		DATE	
PART NO: LCK−TCF816−L225WB−G3		REV: 04	SCALE: 1:1
DRAWING NO:		SIZE: A4	SHEET: 1/1

TITLE: TYPE C 16PIN 母座立插22.5

UNIT: mm

LCKELEC