超高功率合金采样电阻-ULR2817

Ultra high power current sensing resistors-ULR2817

业展电子 YEZHAN ELECTRONICS
2026.06.17
受控文件

特征 Features

精度±5%、±2%、±1%和±0.5%	Tolerance ±5%,±2% ,±1% and ±0.5%
使用温度-65℃~170℃	Operating Temperature range -65℃~170℃
额定功率7W	7W Rated power
绝缘耐压500V	Dielectric withstanding 500V
高散热	Excellent heat exchange
符合RoHS 要求	RoHS Compliant
特殊规格可以订做	Customizable
符合AEC-Q200	AEC-Q200 qualified



应用范围 Applications

混合动力应用的电流传感器	Current sensor for power hybrid applications
汽车电子的控制系统	ECU of automotive
电源模块	Power modules
变频器	Frequency converters
开关式电源	Switch mode power supplies

订购信息 Ordering information

ULR	2817	M	R010	F	R	A	
类型 Type	尺寸 Size	材料 Material	阻值 Resistance	精度 Tolerance	温漂 TCR	包装 Packing	特殊 Special
ULR	2817	M: CuMn S :CuMnSn	R010:10mΩ 1R00:1Ω	D:±0.5% F:±1% G:±2% J:±5%	R:±50	A:Tape B:Bulk	

说明 Notice

适用范围 Scope

本承认书适用于深圳市业展电子有限公司 制造之[超高功率合金采样电阻]。
This specification is available for Ultra high power alloy sensing resistors manufactured by Shenzhen Yezhan Electronics Co., Ltd.

标准试验状态 Standard measuring conditions

温度 5~35℃、相对湿度45~85%给予判定。
Measurement was accepted under the condition of 5~35℃ with a relative Humidity of 45~85%.

超高功率合金采样电阻-ULR2817

Ultra high power current sensing resistors-ULR2817

业展电子 YEZHAN ELECTRONICS
2026.06.17
受控文件

产品尺寸和PCB板布局

Product dimensions and PCB-layout

(Unit：mm)

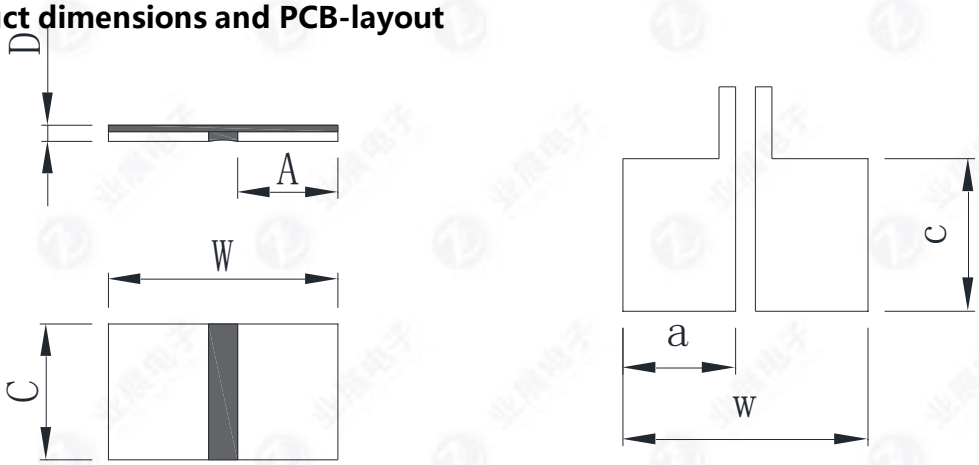

Type	Size	W (mm)	A (mm)	C (mm)	D (mm)
ULR	2817	7.1±0.2	3.2±0.2	4.2±0.2	0.6±0.2

Solder pad type	w	c	a
2817	7.4	4.6	3.4

电气参数

Electrical parameters

Size	Resistance (mΩ)	Rthi (℃/W)	TCR (ppm/℃)	P70°C (W)
2817	5~1500	< 8	±50	7

TCR（ppm/℃）： Test was done with a temperature from 20℃ to 120℃.

超高功率合金采样电阻-ULR2817

Ultra high power current sensing resistors-ULR2817

业展电子 YEZHAN ELECTRONICS
2026.06.17
受控文件

工作特性 Performance data

降功率曲线 Power Derating

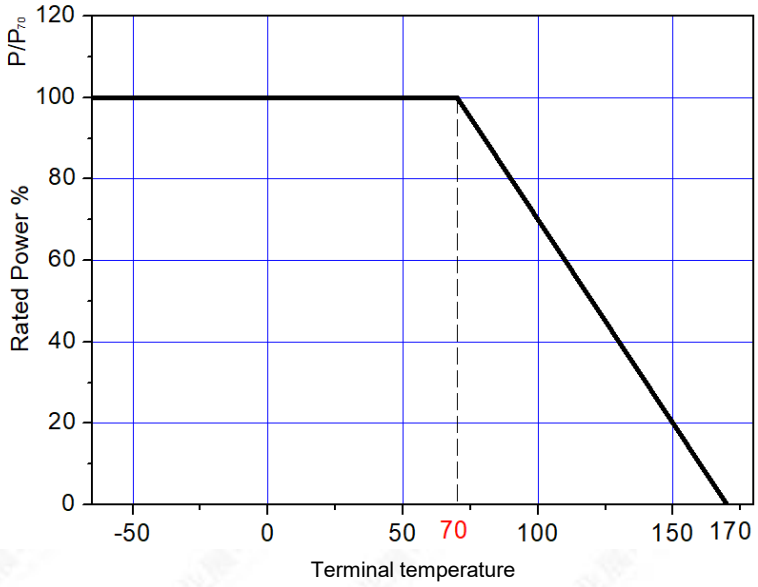

温升曲线 Temperature Rise

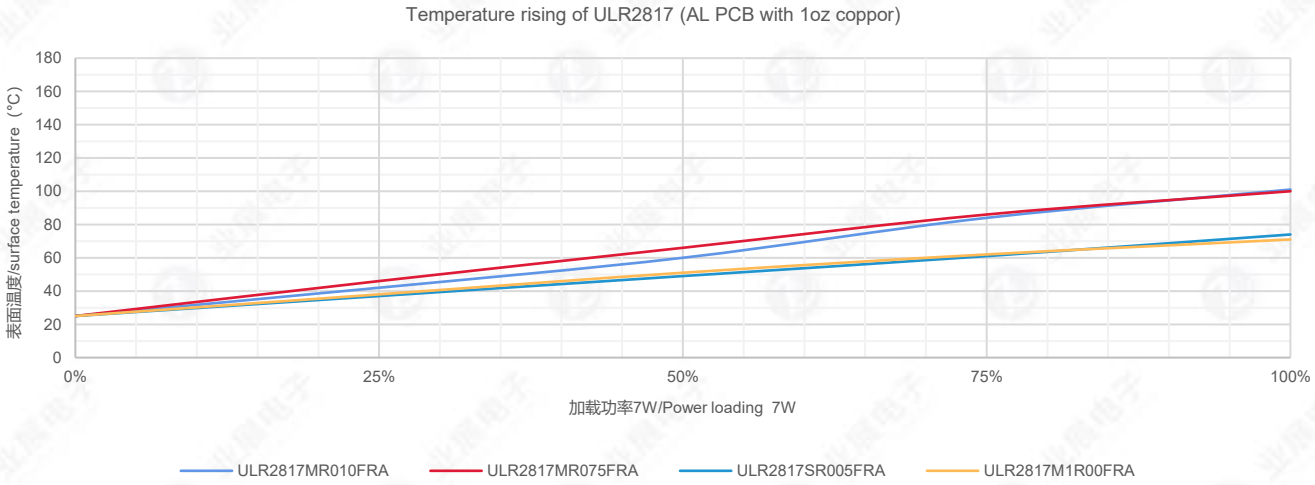

超高功率合金采样电阻-ULR2817

Ultra high power current sensing resistors-ULR2817

业展电子 YEZHAN ELECTRONICS
2026.06.17
受控文件

产品特性 Product Characteristics

Iterms	Additional Requirements	Reference	Limits
High Temperature Exposure	1000hrs.@T=170℃.Unpowered.	MIL-STD-202 Method 108	±1%
Biased Humidity	1000hrs 85℃/85%RH。Note:Specified conditions:10% of operating power.	MIL-STD-202 Method 103	±1%
Operational Life	Condition D Steady State TA=125℃ at rated power.	MIL-STD-202 Method 108	±1%
Solderability	245℃±5℃,5s±0.5s	J-STD-002C	95% Coverage Minimum
Resistance to Soldering Heat	260℃±5℃，10s±1s	MIL-STD-202 Method 210	±0.5%
Short Time Overload	3×Rated power for 5s	MIL-STD-202 Method 301	±0.5%
Moisture Resistance	t=24hrs/cycle.Note: Steps 7a & 7b not required. Unpowered.	MIL-STD-202 Method 106	±0.5%
Thermal Cycling	1000X(-55°C to +150°C)	JESD22-A-104	0.5%
Mechanical Shock	1) Pulse waveform: Half-Sine pulse. 2) Accelerate peak: 100g. 3) Pulse duration: 6ms. 4) Orientation & Shock time: ±X, ±Y, ±Z; 3 times each orientation, total 18 times	MIL-STD-202H Method 213	±0.5%
ESD	1) Direct Contact (DC): ±6kV; 2) Air Discharge (AD): ±12kV, ±16kV, ±25kV;	AEC-Q200-002 REV-B,	±0.5%
Board Flex	1) PCB board size(H×W×T): 100mm ×40mm ×1.6mm. 2) Deformation displacement: 2mm. 3) Duration: 60 (+5) s.	AEC-Q200-005 REV A,	±0.5%
Flame Retardance	1) Test current: 100%, 115%, 130%, 150% (rated current). 2) Test duration: 1h. The following constitutes a failure: 1) A flame over 3.0 seconds duration; 2) An explosion; 3) A temperature above 350℃ sustained for over 10 seconds.	AEC-Q200-001 REV B	< 10s for 350℃
Resistance to Solvents	1) Solvent a: 1 part (by volume) of isopropyl alcohol reagent grade and 3 parts (by volume) of a mixture of 80% (by volume) of kerosene and 20% (by volume) ethylbenzene. 2) Solvent c: 9 parts (by volume) of D-limonene and 1 part of surfactant. 3) Solvent d: 42 parts (by volume) of water 1 part (by volume) of propylene glycol monomethyl ether 1 part (by volume) of monoethanolamine.	MIL-STD-202H Method 215	There was no missing, faded, smeared, blurred, or shifted (dislodged) with the marks. There was no crack, separation, crazing, swelling, softening, degradation on the samples.
Vibration	Test from 10-2000 Hz. 5 g's for 20 min, 12 cycles each of 3 orientations.	MIL-STD-202 Method 204	±0.5%
Resistance	Measuring method:Measure Botton terminal by 4 probes	4-point probes method	

超高功率合金采样电阻-ULR2817

Ultra high power current sensing resistors-ULR2817

业展电子 YEZHAN ELECTRONICS
2026.06.17
受控文件

印字标识 Marking

R010F

R010：10mΩ(Value阻值)
F：±1%(Tolerance精度)

包装 Packaging

载带规格尺寸
Embossed plastic Tape Specifications

(Unit：mm)

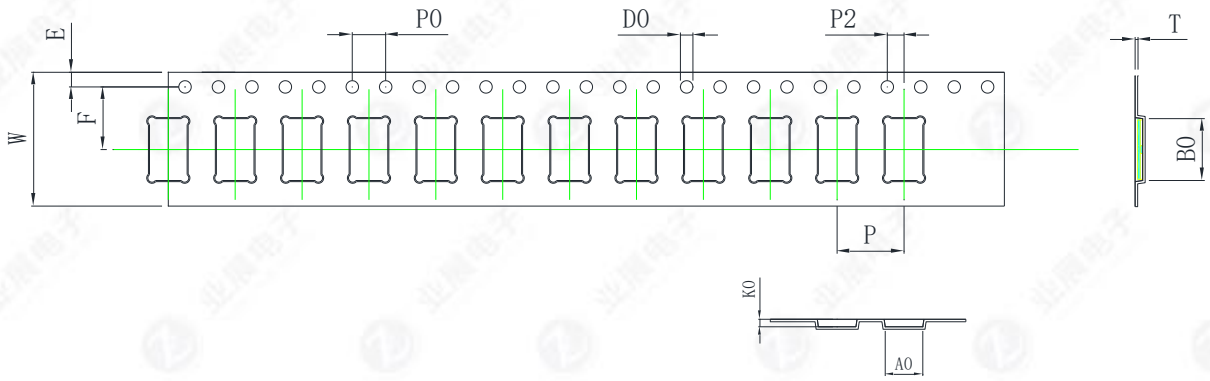

Size	A0 ±0.1	B0 ±0.1	W ±0.3	E ±0.1	F ±0.1	P ±0.1	P0 ±0.1	P2 ±0.1	D0 ±0.1	K0 ±0.1	T ±0.1	Quantity (pcs)
2817	4.5	7.4	16	1.75	7.5	8	4	2	1.5	0.9	0.3	1500

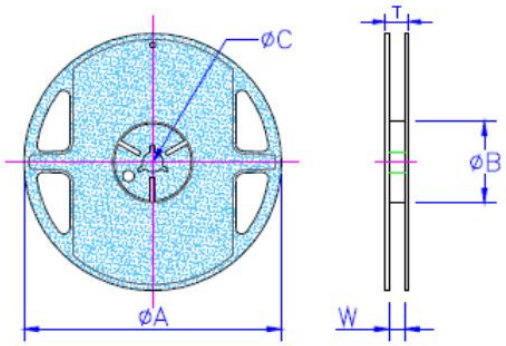

Size	2817
φA	178
φB	60
φC	13
W	16.5
T	21

业展电子
2026.06.17
受控文件

版本信息 Version History

版本 Version	日期 Date	修订描述 Description of amendment	拟定 Draft	审核 Checked
A1.0	24-July-2024	工程版首版发行	程子鹏	胡紫阳
A1.1	11-Apr-2025	新增热内阻、端子功率曲线、温升曲线及4线测试图示	程子鹏	曾庆煜
A1.2	11-Sep-2025	更新抗焊接热、机械冲击及震动Limits值；调整D尺寸公差	程子鹏	曾庆煜
A1.3	12-Jun-2026	新增AEC-Q200描述	陈易	程子鹏