Features

- -18V, -68A
  $R_{DS(ON)}$ TYP= 4.5mΩ @ V_{GS} = -4.5V
  $R_{DS(ON)}$ TYP= 6.8mΩ @ V_{GS} = -2.5V
- Advanced Trench Technology
- Excellent $R_{DS(ON)}$ and Low Gate Charge
- Lead Free

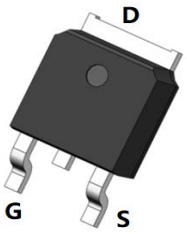

TO-252-3L(DPAK) Top View

Applications

- Load Switch
- PWM Application
- Power Management

100% UIS TESTED!
100% ΔVds TESTED!

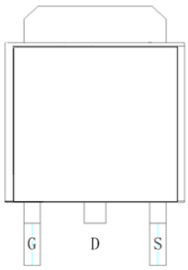

Pin Assignment

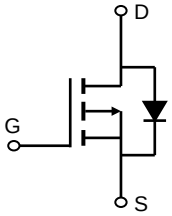

Schematic Diagram

Absolute Maximum Ratings (T_C=25℃ unless otherwise specified)

Symbol	Parameter		Max.	Units
V_{DSS}	Drain-Source Voltage		-18	V
V_{GSS}	Gate-Source Voltage		±12	V
I_D	Continuous Drain Current	T_C = 25℃	-68	A
		T_C = 100℃	-41	
I_{DM}	Pulsed Drain Current note1		-272	A
P_D	Power Dissipation	T_C= 25℃	60	W
$R_{\theta JC}$	Thermal Resistance, Junction to Ambient		2.1	℃/ W
T_J, T_{STG}	Operating and Storage Temperature Range		-55 to +150	℃

Electrical Characteristics (T_J=25℃ unless otherwise specified)

Symbol	Parameter	Test Condition	Min.	Typ.	Max.	Units
Off Characteristic						
$V_{(BR)DSS}$	Drain-Source Breakdown Voltage	V_{GS}=0V,I_D= -250μA	-15	-18	-	V
I_{DSS}	Zero Gate Voltage Drain Current	V_{DS} = -15V, V_{GS} = 0V,	-	-	-1	μA
I_{GSS}	Gate to Body Leakage Current	V_{DS} =0V, V_{GS} = ±12V	-	-	±100	nA
On Characteristics						
$V_{GS(th)}$	Gate Threshold Voltage	V_{DS}= V_{GS}, I_D= -250μA	-0.4	-0.6	-1.2	V
$R_{DS(on)}$	Static Drain-Source on-Resistance note3	V_{GS} =-4.5V, I_D =-20A	-	4.5	6.0	mΩ
		V_{GS} =-2.5V, I_D =-5A	-	6.8	8.0	
Dynamic Characteristics						
C_{iss}	Input Capacitance	V_{DS} =-10V, V_{GS} =0V, f = 1.0MHz	-	2996	-	pF
C_{oss}	Output Capacitance		-	532	-	pF
C_{rss}	Reverse Transfer Capacitance		-	459	-	pF
Q_g	Total Gate Charge	V_{DS} =-10V, I_D =-20A, V_{GS} =-4.5V	-	56	-	nC
Q_{gs}	Gate-Source Charge		-	11	-	nC
Q_{gd}	Gate-Drain(“Miller”) Charge		-	14	-	nC
Switching Characteristics						
$t_{d(on)}$	Turn-on Delay Time	V_{DD} =-10V, I_D =-20A, R_{GEN}=3.0Ω, V_{GS} =-4.5V	-	17	-	ns
t_r	Turn-on Rise Time		-	43	-	ns
$t_{d(off)}$	Turn-off Delay Time		-	84	-	ns
t_f	Turn-off Fall Time		-	25	-	ns
Drain-Source Diode Characteristics and Maximum Ratings						
I_S	Maximum Continuous Drain to Source Diode Forward Current		-	-	-68	A
I_{SM}	Maximum Pulsed Drain to Source Diode Forward Current		-	-	-272	A
V_{SD}	Drain to Source Diode Forward Voltage	V_{GS} = 0V, I_S =-10A	-	-	-1.2	V
trr	Reverse Recovery Time	T_J=25℃,I_{SD}=-10A, V_{GS}=0V di/dt=-100A/μs	-	46	-	ns
Qrr	Reverse Recovery Charge		-	55	-	nC

Notes:1. Repetitive Rating: Pulse Width Limited by Maximum Junction Temperature

2. EAS condition: T_J=25℃,V_{DD}=-10V,V_G=-10V, R_G=5.9Ω, L=0.5mh,I_{AS}=-29A

3. Pulse Test: Pulse Width≤300μs, Duty Cycle≤0.5%

Test Circuit

Gate Charge Test Circuit & Waveform

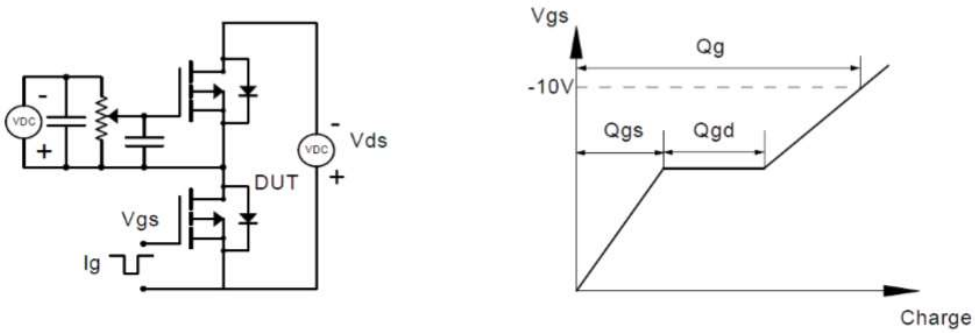

Resistive Switching Test Circuit & Waveforms

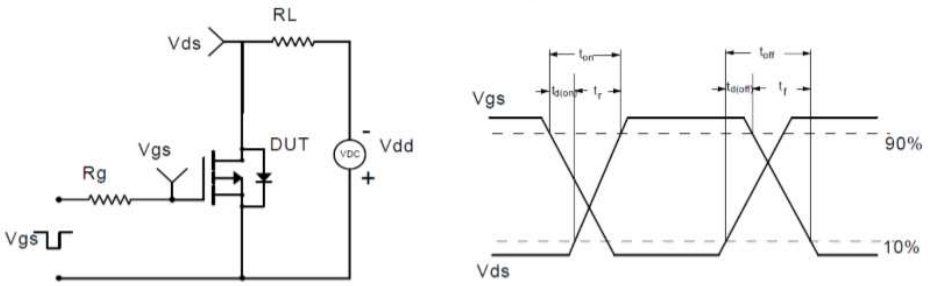

Unclamped Inductive Switching (UIS) Test Circuit & Waveforms

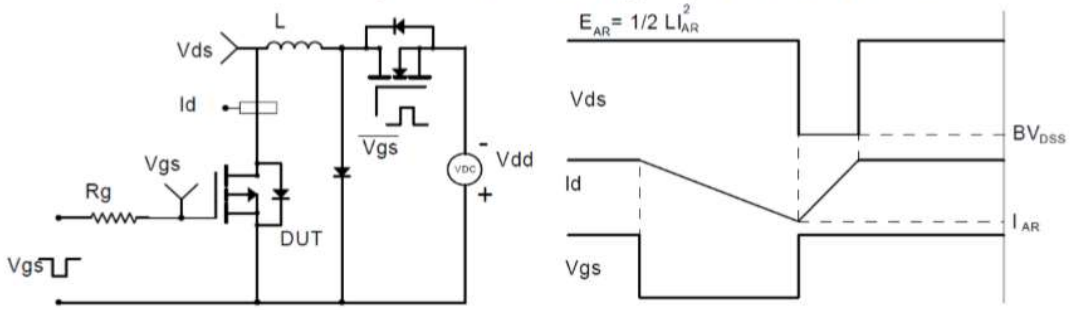

Diode Recovery Test Circuit & Waveforms

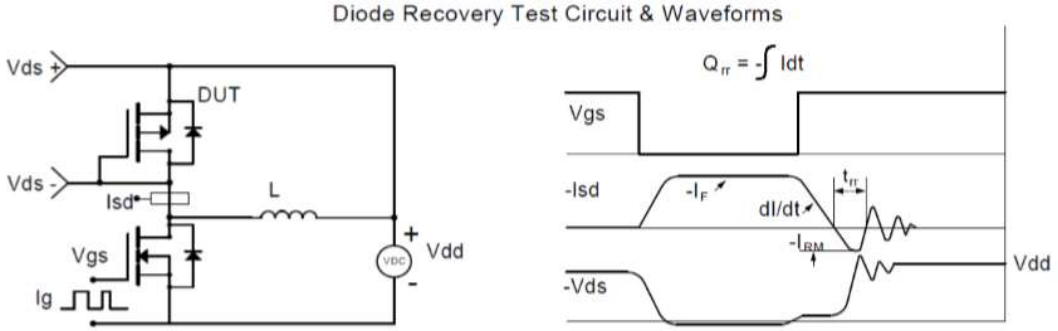

Package Mechanical Data(TO-252-3L)

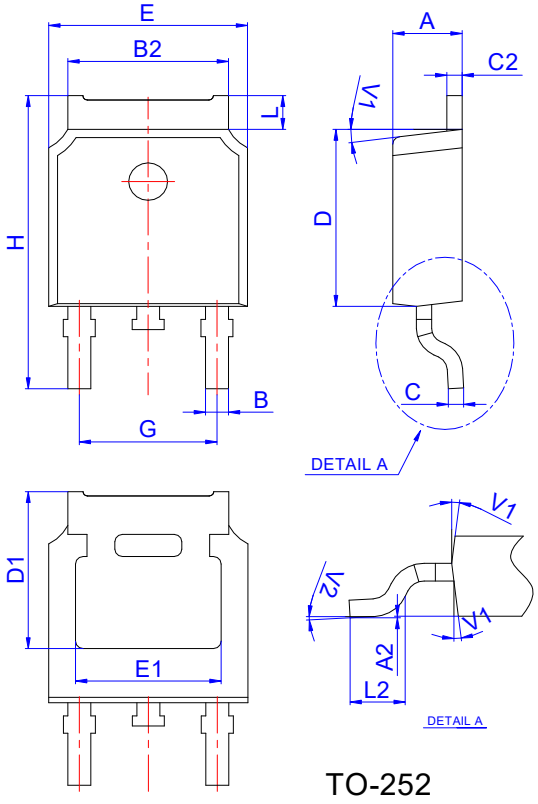

TO-252

Ref.	Dimensions					
	Millimeters			Inches		
	Min.	Typ.	Max.	Min.	Typ.	Max.
A	2.10		2.50	0.083		0.098
A2	0		0.10	0		0.004
B	0.66		0.86	0.026		0.034
B2	5.18		5.48	0.202		0.216
C	0.40		0.60	0.016		0.024
C2	0.44		0.58	0.017		0.023
D	5.90		6.30	0.232		0.248
D1	5.30REF			0.209REF		
E	6.40		6.80	0.252		0.268
E1	4.63			0.182		
G	4.47		4.67	0.176		0.184
H	9.50		10.70	0.374		0.421
L	1.09		1.21	0.043		0.048
L2	1.35		1.65	0.053		0.065
V1		7°			7°	
V2	0°		6°	0°		6°