DFMC 1,5/ 3-ST-3,5-LR - PCB connector

1790496

https://www.phoenixcontact.com/us/products/1790496

Please be informed that the data shown in this PDF document is generated from our online catalog. Please find the complete data in the user documentation. Our general terms of use for downloads are valid.

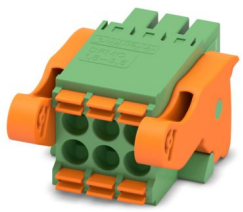

PCB connector, nominal cross section: 1.5 mm^2, color: green, nominal current: 8 A, rated voltage (III/2): 160 V, contact surface: Sn, contact connection type: Socket, number of potentials: 6, number of rows: 2, number of positions: 3, number of connections: 6, product range: DFMC 1,5/.. -ST-LR, pitch: 3.5 mm, connection method: Push-in spring connection, conductor/PCB connection direction: 0 °, plug-in system: COMBICON DFMC 1,5, locking: Lock-and-release locking system, mounting method: Lock & Release ejector lever, type of packaging: packed in cardboard

Your advantages

- Time saving push-in connection, tools not required
- Defined contact force ensures that contact remains stable over the long term
- Intuitive operation due to color-coded actuating push button
- Optimized for tight installation situations: operation and conductor connection from one direction
- Automatic locking and intuitive release through Lock and Release operating lever in contrasting color

Commercial data

Item number	1790496
Packing unit	50 pc
Minimum order quantity	50 pc
Sales key	AA02
Product key	AABFJC
Catalog page	Page 185 (C-1-2013)
GTIN	4046356594554
Weight per piece (including packing)	4.332 g
Weight per piece (excluding packing)	4.312 g
Customs tariff number	85366990
Country of origin	DE

Technical data

Product properties

Product type	PCB connector
Product family	DFMC 1,5/..-ST-LR
Product line	COMBICON Connectors S
Type	Plug component
Number of positions	3
Pitch	3.5 mm
Number of connections	6
Number of rows	2
Number of potentials	6
Mounting flange	Lock & Release ejector lever

Electrical properties

Nominal current I_N	8 A
Nominal voltage U_N	160 V
Contact resistance	2 mΩ
Rated voltage (III/3)	160 V
Rated surge voltage (III/3)	2.5 kV
Rated voltage (III/2)	160 V
Rated surge voltage (III/2)	2.5 kV
Rated voltage (II/2)	320 V
Rated surge voltage (II/2)	2.5 kV

Connection data

Connection technology

Type	Plug component
Connector system	COMBICON DFMC 1,5
Nominal cross section	1.5 mm²
Contact connection type	Socket

Interlock

Locking type	Lock-and-release locking system
Mounting flange	Lock & Release ejector lever

Conductor connection

Connection method	Push-in spring connection
Conductor/PCB connection direction	0 °
Conductor cross section rigid	0.2 mm² ... 1.5 mm²
Conductor cross section flexible	0.2 mm² ... 1.5 mm²
Conductor cross section AWG	24 ... 16
Conductor cross section flexible, with ferrule without plastic sleeve	0.25 mm² ... 1.5 mm²

Conductor cross section, flexible, with ferrule, with plastic sleeve	0.14 mm² ... 0.75 mm²
Cylindrical gauge a x b / diameter	2.4 mm x 1.5 mm / 1.6 mm
Stripping length	10 mm

Specifications for ferrules without insulating collar

recommended crimping tool	1212034 CRIMPFOX 6
ferrules without insulating collar, according to DIN 46228-1	Cross section: 0.25 mm²; Length: 7 mm
	Cross section: 0.34 mm²; Length: 7 mm
	Cross section: 0.5 mm²; Length: 8 mm ... 10 mm
	Cross section: 0.75 mm²; Length: 8 mm ... 10 mm
	Cross section: 1 mm²; Length: 8 mm ... 10 mm
	Cross section: 1.5 mm²; Length: 10 mm

Specifications for ferrules with insulating collar

recommended crimping tool	1212034 CRIMPFOX 6
ferrules with insulating collar, according to DIN 46228-4	Cross section: 0.14 mm²; Length: 8 mm
	Cross section: 0.25 mm²; Length: 8 mm ... 10 mm
	Cross section: 0.34 mm²; Length: 8 mm ... 10 mm
	Cross section: 0.5 mm²; Length: 8 mm ... 10 mm
	Cross section: 0.75 mm²; Length: 10 mm

Material specifications

Material data - contact

Note	WEEE/RoHS-compliant, free of whiskers according to IEC 60068-2-82/JEDEC JESD 201
Contact material	Cu alloy
Surface characteristics	hot-dip tin-plated
Metal surface terminal point (top layer)	Tin (4 - 8 µm Sn)
Metal surface contact area (top layer)	Tin (4 - 8 µm Sn)

Material data - housing

Color (Housing)	green (6021)
Insulating material	PA
Insulating material group	I
CTI according to IEC 60112	600
Flammability rating according to UL 94	V0
Glow wire flammability index GWFI according to EN 60695-2-12	850
Glow wire ignition temperature GWIT according to EN 60695-2-13	775
Temperature for the ball pressure test according to EN 60695-10-2	125 °C

Material data – actuating element

Color (Actuating element)	orange (2003)
Insulating material	PBT
Insulating material group	I

CTI according to IEC 60112	600
Flammability rating according to UL 94	V0

Dimensions

Dimensional drawing	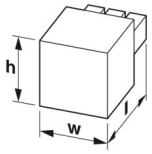
Pitch	3.5 mm
Width [w]	17.4 mm
Height [h]	13.25 mm
Length [l]	27.79 mm

Notes

Notes on operation	In accordance with IEC 61984, COMBICON connectors have no switching power (COC). During designated use, they must not be plugged in or disconnected when carrying voltage or under load.

Mechanical tests

Conductor connection

Specification	IEC 60999-1:1999-11
Result	Test passed

Test for conductor damage and slackening

Specification	IEC 60999-1:1999-11
Result	Test passed

Repeated connection and disconnection

Specification	IEC 60999-1:1999-11
Result	Test passed

Pull-out test

Specification	IEC 60999-1:1999-11
Conductor cross section/conductor type/tractive force setpoint/actual value	0.2 mm² / solid / > 10 N
	0.2 mm² / flexible / > 10 N
	1.5 mm² / solid / > 40 N
	1.5 mm² / flexible / > 40 N

Insertion and withdrawal forces

Specification	IEC 60512-13-2:2006-02
Result	Test passed
No. of cycles	25
Insertion strength per pos. approx.	3 N
Withdraw strength per pos. approx.	2 N

Resistance of inscriptions

Specification	IEC 60068-2-70:1995-12
Result	Test passed

Polarization and coding

Specification	IEC 60512-13-5:2006-02
Result	Test passed

Visual inspection

Specification	IEC 60512-1-1:2002-02
Result	Test passed

Dimension check

Specification	IEC 60512-1-2:2002-02
Result	Test passed

Environmental and real-life conditions

Vibration test

Specification	IEC 60068-2-6:2007-12
Frequency	10 - 150 - 10 Hz
Sweep speed	1 octave/min
Amplitude	0.35 mm (10 Hz ... 60.1 Hz)
Acceleration	50 m/s² (60.1 Hz ... 150 Hz)
Test duration per axis	2.5 h
Test directions	X-, Y- and Z-axis

Durability test

Specification	IEC 60512-9-1:2010-03
Impulse withstand voltage at sea level	2.95 kV
Contact resistance R_1	2 mΩ
Contact resistance R_2	2.3 mΩ
Insertion/withdrawal cycles	25
Insulation resistance, neighboring positions	> 5 MΩ

Climatic test

Specification	ISO 6988:1985-02
Corrosive stress	0.2 dm^3 SO_2 on 300 dm^3/40 °C/1 cycle
Thermal stress	105 °C/168 h
Power-frequency withstand voltage	1.39 kV

Ambient conditions

Ambient temperature (operation)	-40 °C ... 105 °C (dependent on the derating curve)
Ambient temperature (storage/transport)	-40 °C ... 70 °C
Relative humidity (storage/transport)	30 % ... 70 %
Ambient temperature (assembly)	-5 °C ... 100 °C

Electrical tests

Thermal test | Test group C

Specification	IEC 60512-5-1:2002-02
Tested number of positions	20

Insulation resistance

Specification	IEC 60512-3-1:2002-02
Insulation resistance, neighboring positions	> 5 MΩ

Temperature cycles

Specification	IEC 60999-1:1999-11
Result	Test passed

Air clearances and creepage distances |

Specification	IEC 60664-1:2007-04
Insulating material group	I
Comparative tracking index (IEC 60112)	CTI 600
Rated insulation voltage (III/3)	160 V
Rated surge voltage (III/3)	2.5 kV
minimum clearance value - non-homogenous field (III/3)	1.5 mm
minimum creepage distance (III/3)	2 mm
Rated insulation voltage (III/2)	160 V
Rated surge voltage (III/2)	2.5 kV
minimum clearance value - non-homogenous field (III/2)	1.5 mm
minimum creepage distance (III/2)	1.5 mm
Rated insulation voltage (II/2)	320 V
Rated surge voltage (II/2)	2.5 kV
minimum clearance value - non-homogenous field (II/2)	1.5 mm
minimum creepage distance (II/2)	1.6 mm

Packaging specifications

Type of packaging	packed in cardboard

Drawings

Diagram

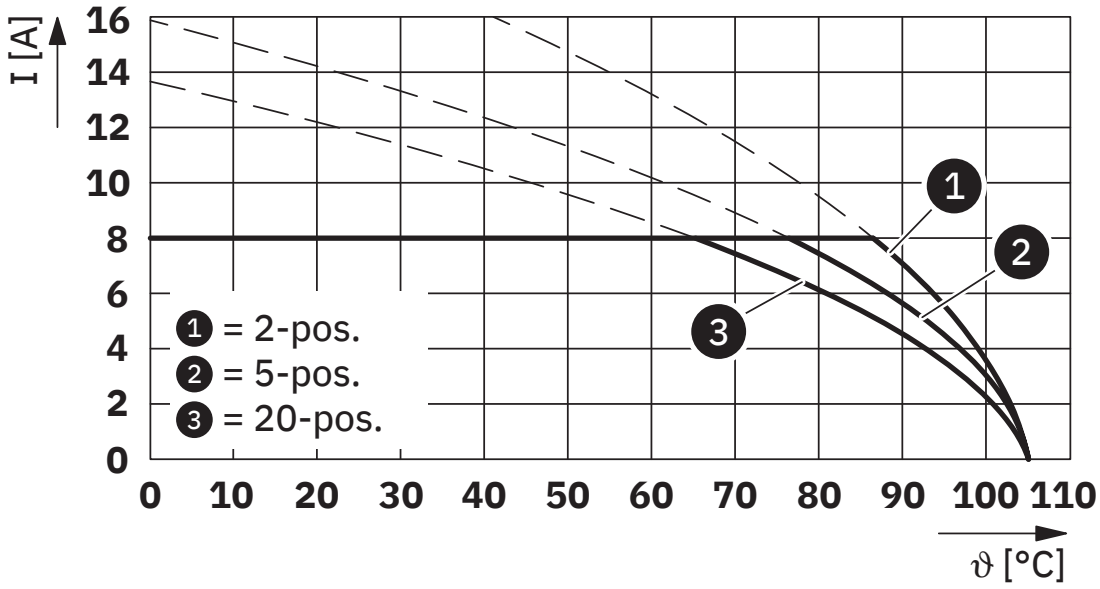

Type: DFMC 1,5/...-ST-3,5-LR with DMC 1,5/...-G1-3,5-LR P...THR

Dimensional drawing

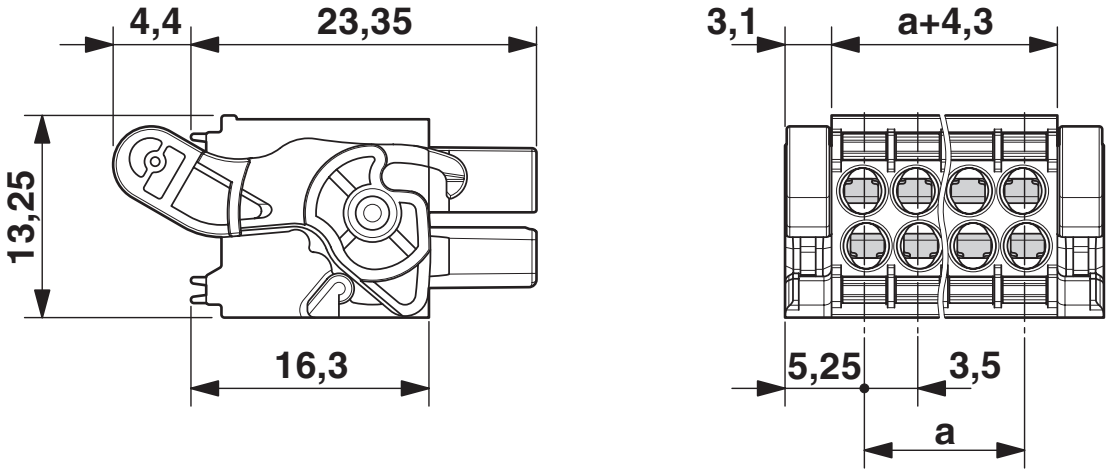

Diagram

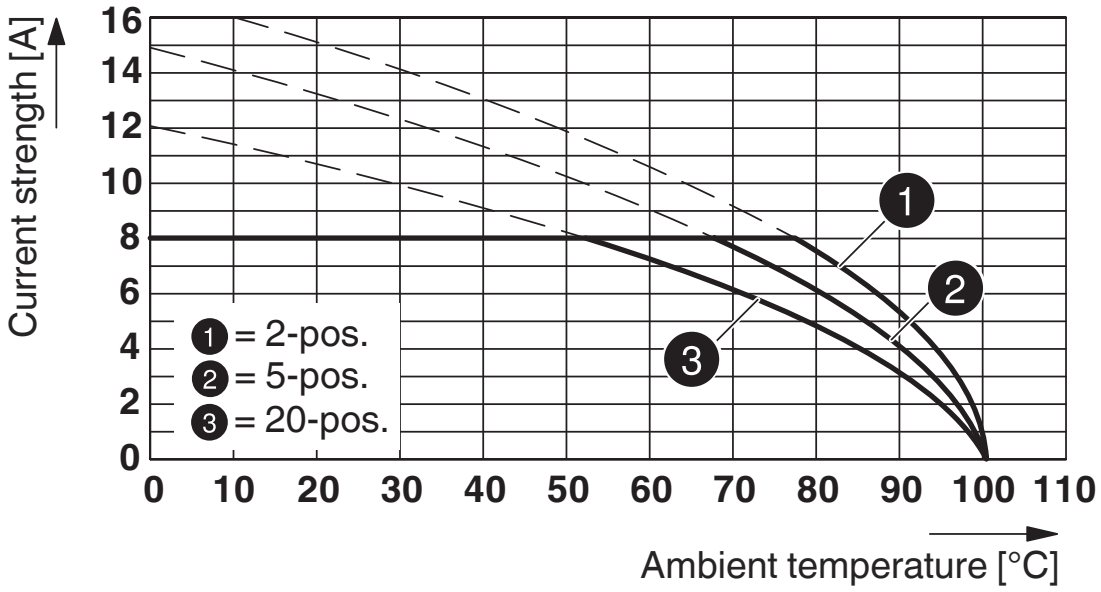

Type: DFMC 1,5/...-ST-3,5-LR with DMCV 1,5/...-G1F-3,5-LR P20THR

Diagram

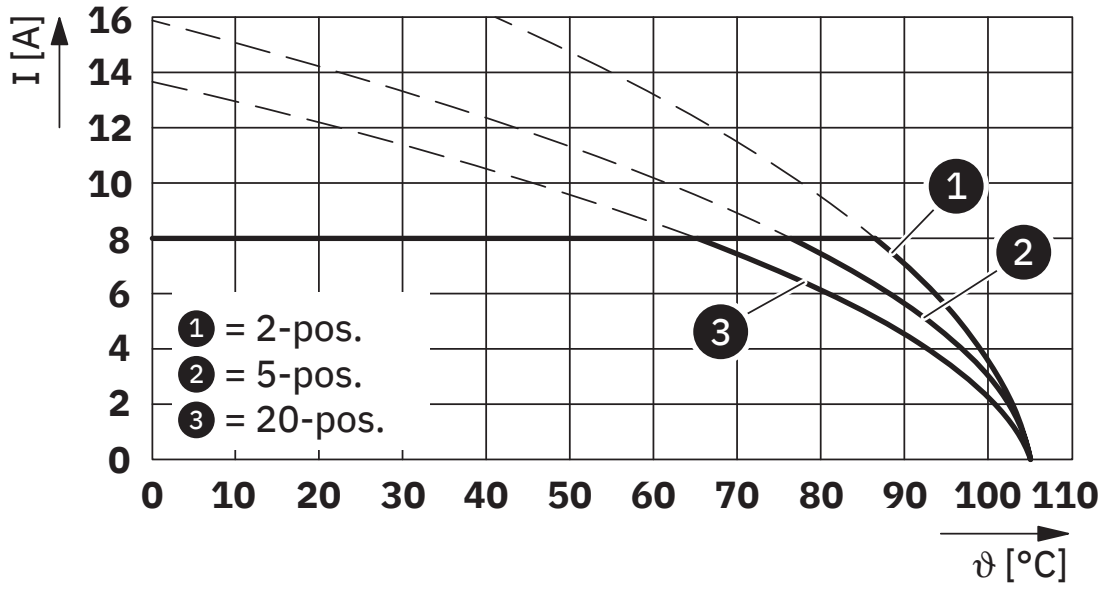

Type: DFMC 1,5/...-ST-3,5-LR with DMC 1,5/...-G1F-3,5-LR P35

Schematic diagram

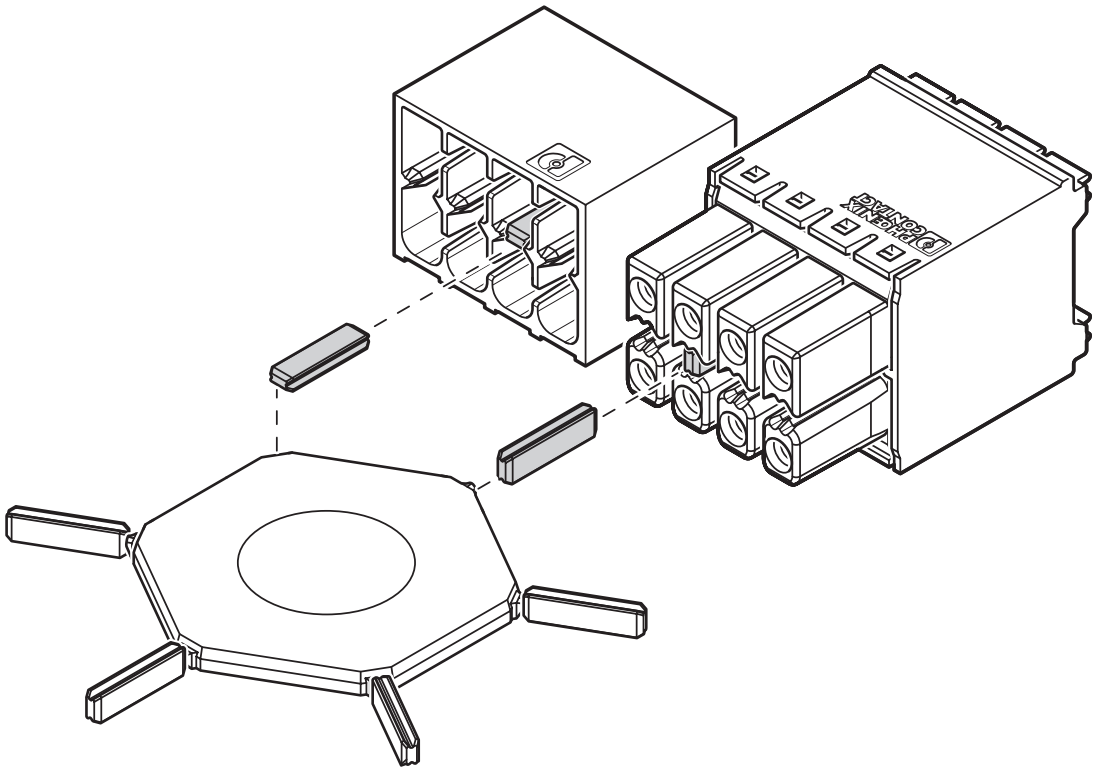

Use of the CP-DMC... coding profile

Diagram

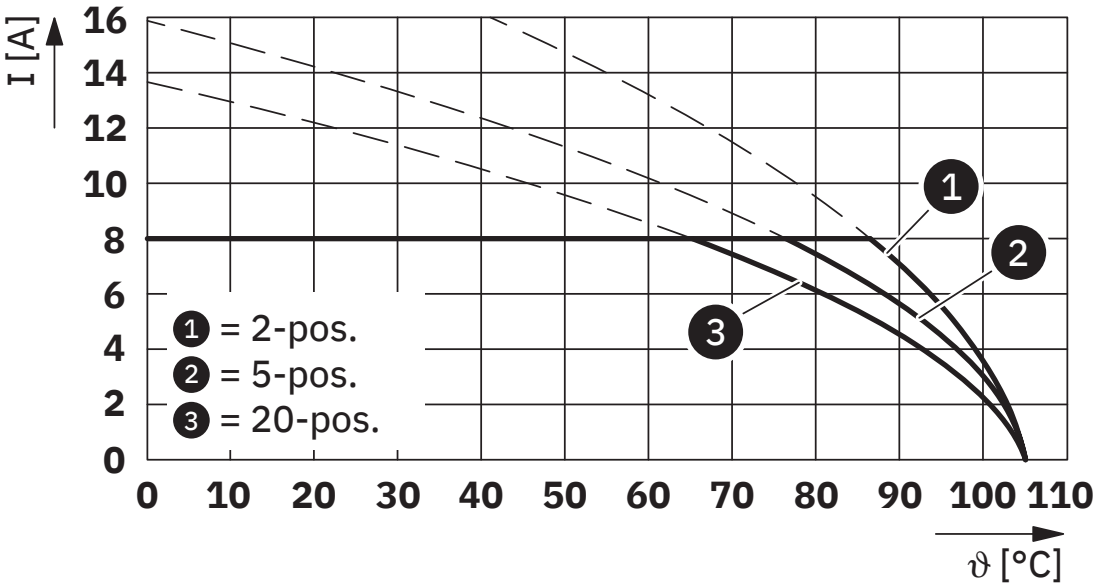

Type: DFMC 1,5/...-ST-3,5-LR with DMC 1,5/...-G1F-3,5-LR P...THR

Diagram

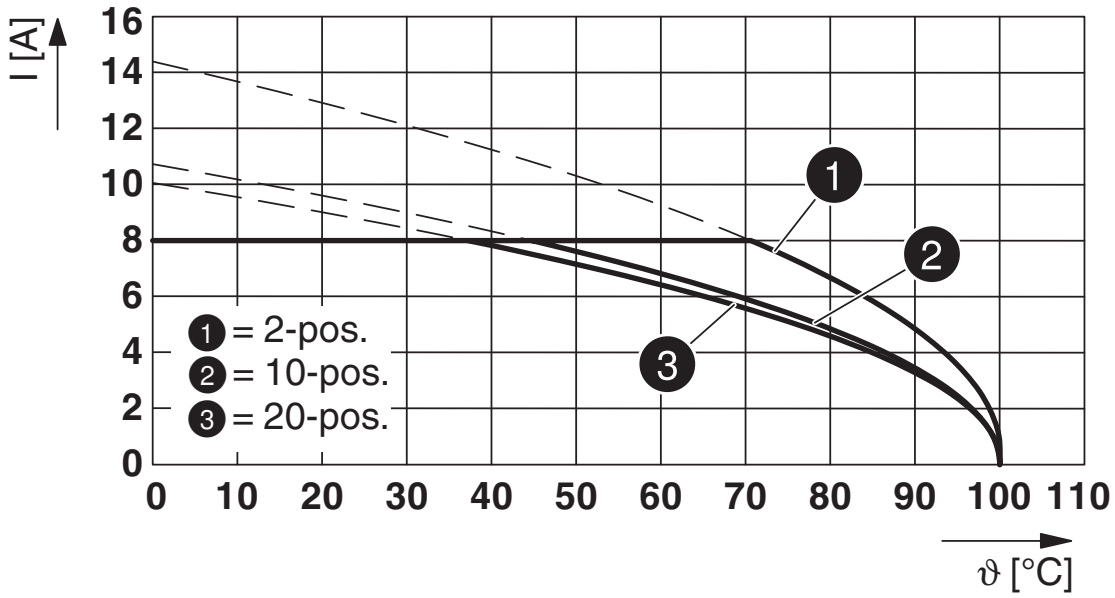

Type: DFMC 1,5/...-ST-3,5-LR with DMCV 1,5/...-G1F-3,5-LR P35

Approvals

To download certificates, visit the product detail page: https://www.phoenixcontact.com/us/products/1790496

cULus Recognized
Approval ID: E60425-19920306

	Nominal voltage U_N	Nominal current I_N	Cross section AWG	Cross section mm^2
Use group B				
Field wiring	300 V	8 A	24 - 16	-
Use group C				
Factory wiring	50 V	8 A	24 - 16	-
Use group D				
Field wiring	300 V	8 A	24 - 16	-

VDE report with production monitoring
Approval ID: 40038423

	Nominal voltage U_N	Nominal current I_N	Cross section AWG	Cross section mm^2
	160 V	8 A	-	0.2 - 1.5

Classifications

ECLASS

ECLASS-11.0	27460202
ECLASS-12.0	27460202
ECLASS-13.0	27460202

ETIM

ETIM 9.0	EC002638

UNSPSC

UNSPSC 21.0	39121400

Environmental product compliance

EU RoHS

Fulfills EU RoHS substance requirements	Yes, No exemptions

China RoHS

Environment friendly use period (EFUP)	EFUP-E
	No hazardous substances above the limits

EU REACH SVHC

REACH candidate substance (CAS No.)	No substance above 0.1 wt%

EF3.0 Climate Change

CO2e kg	0.104 kg CO2e

Phoenix Contact 2025 © - all rights reserved
https://www.phoenixcontact.com

Phoenix Contact USA
586 Fulling Mill Road
Middletown, PA 17057, United States
(+717) 944-1300
info@phoenixcon.com