REACH & RoHS COMPLIANT

REV.	ECN / DESCRIPTION	BY	DATE
A0	NEW	ZG.Hu	2017.11.21

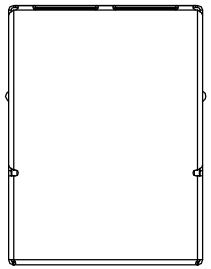

TOP VIEW

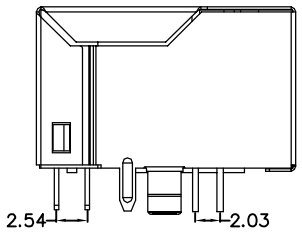

LEFT SIDE VIEW

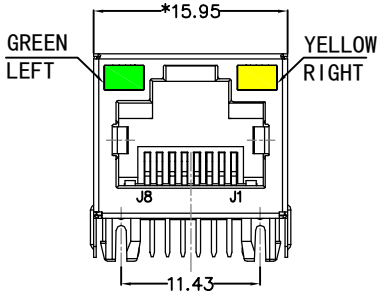

FRONT VIEW

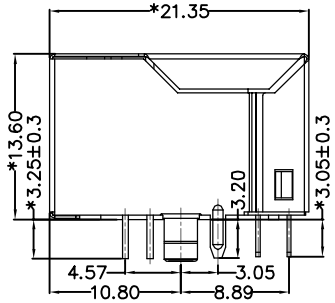

RIGHT SIDE VIEW

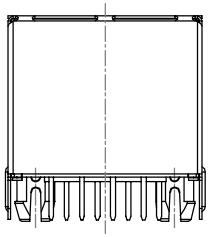

BACK VIEW

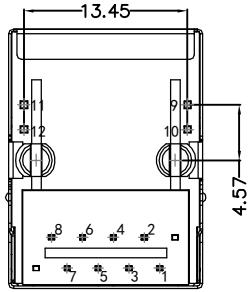

BOTTOM VIEW

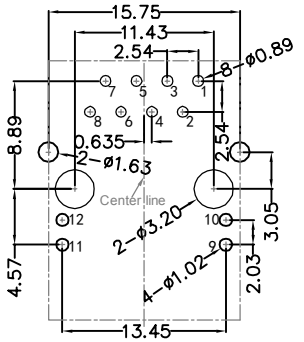

RECOMMENDED PCB LAYOUT
VIEWED FROM COMPONENT SIDE

MATERIAL:

HOUSING : PBT,UL94V-0,BLACK.
TERMINALS BRACKET: PBT,UL94V-0,BLACK.
SHIELD: BRASS,T=0.20MM,NICKEL PLATING ON ALL AREA.
TERMINAL: PHOSPHOR BRONZE ,T=0.35MM,
6U" GOLD PLATING ON CONTACT AREA.

MECHANICAL:

DURABILITY : 750 CYCLES MIN.
MATING FORCE : 23N MAX.
OPERATING TEMPERATURE: -40°C~+85°C.
STORAGE TEMPERATURE: -40°C~+85°C.
ALL CRITICAL DIMENSIONS WITH "*"

DGKYD

东莞市科优达电子科技有限公司
Dong Guan Ke You Da Electronic Tech.Co.,Ltd
Tel:+86-0769-87334608; Fax:+86-0769-87847129 WWW.DGKYD.COM

TITLE: TAB-UP 1X1 10/100BASE	SIZE A4	UNITS MM[INCH]	GENERAL TOLERANCES UNLESS SPECIFIED		APPROVED BY: JP.Gong
PART NO.: DGKYD211B002CD2A4D	SACLE 1:1	REV A0	x±0.35	x°±3.0°	CHECKED BY: TW.XU
			.x±0.30	.x°±2.0°	
REMARK:	SHEET 1/4		.xx±0.25	.xx°±1.5°	DESIGND BY: ZG.Hu
			.xxx±0.10	.xxx°±1.0°	

REACH & RoHS COMPLIANT

REV.	ECN / DESCRIPTION	BY	DATE
A0	NEW	ZG.Hu	2017.11.21

RECOMMENDED PANEL CUTOUT(REFFERENCE ONLY):

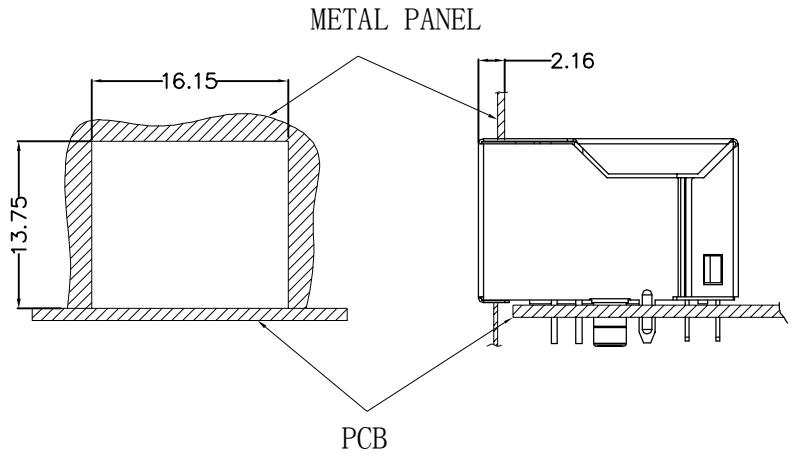

UNIT: MM / INCH
TOLERANCES: ±0.10 / 0.004
REFERENCE ONLY

KEEP-OUT AREA(COMPONENT SIDE VIEW):

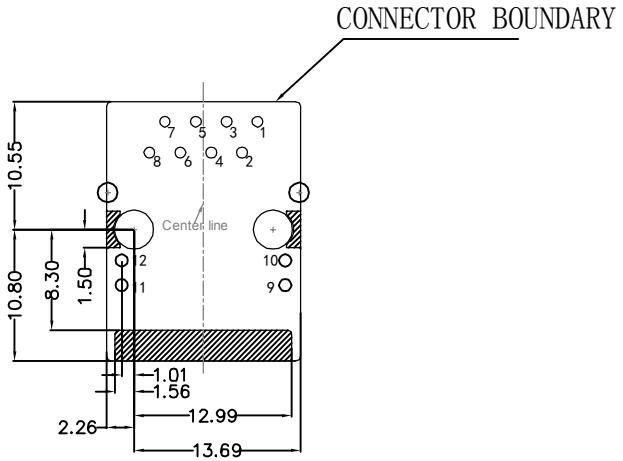

PLUG-IN SIDE

UNIT: MM / INCH
TOLERANCES: ±0.10 / 0.004

DGKYD
东莞市科优达电子科技有限公司
Dong Guan Ke You Da Electronic Tech.Co.,Ltd
Tel:+86-0769-87334608; Fax:+86-0769-87847129 WWW.DGKYD.COM

TITLE: TAB-UP 1X1 10/100BASE	SIZE A4	UNITS MM[INCH]	GENERAL TOLERANCES UNLESS SPECIFIED		APPROVED BY: JP.Gong
PART NO.: DGKYD211B002CD2A4D	SACLE 1:1	REV A0	x±0.35	x°±3.0°	CHECKED BY: TW.XU
REMARK:	SHEET 2/4		.x±0.30	.x°±2.0°	
			.xx±0.25	.xx°±1.5°	DESIGND BY: ZG.Hu
			.xxx±0.10	.xxx°±1.0°	

REACH & RoHS COMPLIANT

REV.	ECN / DESCRIPTION	BY	DATE
A0	NEW	ZG.Hu	2017.11.21

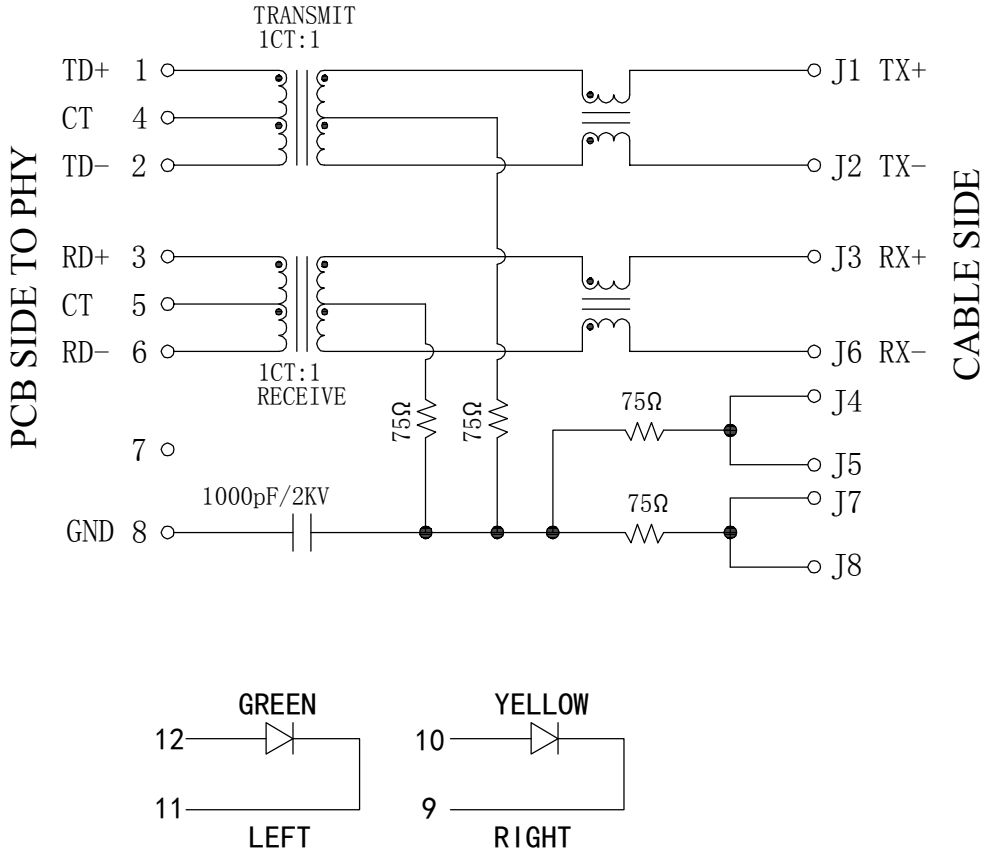

Electrical:

1.Turn ratio:1~2:J1~J2=1CT:1CT(±2%).
3~6:J3~J6=1CT:1CT(±2%).
2.OCL:350uH Min.at 100KHz 100mV 8mA DC.
3.Insertion Loss: -1.0 dB Max 1~100MHz.
4.Return loss: -20dB Min 1~10MHz;
-16dB Min 10~30MHz.
-12dB Min 30~60MHz.
-10dB Min 60~80MHz.
5.Cross talk: -40dB Min 1~30MHz;
-35dB Min 30~60MHz;
-30dB Min 60~100MHz;
6.CMR: -30dB Min 1~100MHz;
7.Hi-Pot:1500V AC & 2250V DC
6S 1mA PRI TO SEC

LED Specification

Standard LED Color	LED Wavelength	Foward(A)	Foward(V)
Green	568nm	20mA	1.85-2.45V
Yellow	585nm	20mA	1.7-2.2V

DGKYD

东莞市科优达电子科技有限公司
Dong Guan Ke You Da Electronic Tech.Co.,Ltd
Tel:+86-0769-87334608; Fax:+86-0769-87847129 WWW.DGKYD.COM

TITLE: TAB-UP 1X1 10/100BASE	SIZE A4	UNITS MM[INCH]	GENERAL TOLERANCES UNLESS SPECIFIED		APPROVED BY: JP.Gong
PART NO.: DGKYD211B002CD2A4D	SACLE 1:1	REV A0	x±0.35	x°±3.0°	CHECKED BY: TW.XU
REMARK:	SHEET 3/4		.x±0.30	.x°±2.0°	
			.xx±0.25	.xx°±1.5°	DESIGND BY: ZG.Hu
			.xxx±0.10	.xxx°±1.0°	

REACH & RoHS COMPLIANT

PROFILE OF WAVE SOLDER

REV.	ECN / DESCRIPTION	BY	DATE
A0	NEW	ZG.Hu	2017.11.21

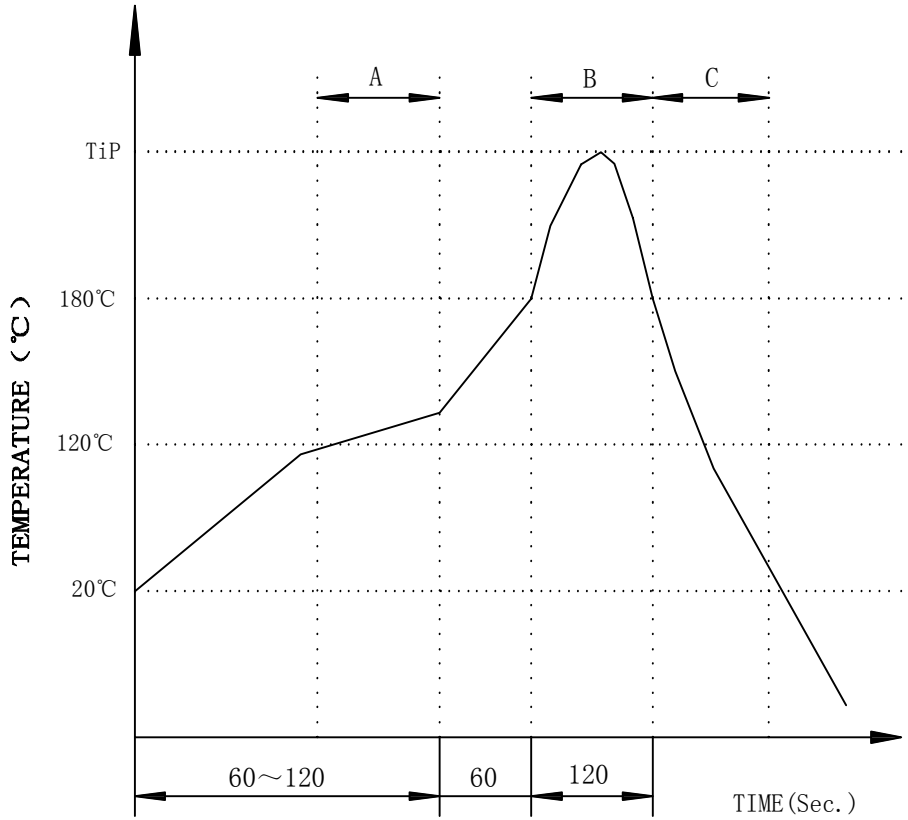

A.Preheating B.Soldering C.Gradual Cooling
Tip temperature:260±5°C.
Tip temperature time:5Sec Max.
Tip melting point of Sn96.5/Ag3/Cu0.5:217°C.

Remarks: after wave soldering, the plastic positioning columns of the product which under the PCB will be slightly melted, but it won't affect its function.

DGKYD
东莞市科优达电子科技有限公司
Dong Guan Ke You Da Electronic Tech.Co.,Ltd
Tel:+86-0769-87334608; Fax:+86-0769-87847129 WWW.DGKYD.COM

TITLE:	SIZE	UNITS	GENERAL TOLERANCES UNLESS SPECIFIED		APPROVED BY:
TAB-UP 1X1 10/100BASE	A4	MM[INCH]			JP.Gong
PART NO.:	SACLE	REV	x±0.35	x°±3.0°	CHECKED BY:
DGKYD211B002CD2A4D	1:1	A0	.x±0.30	.x°±2.0°	TW.XU
REMARK:	SHEET		.xx±0.25	.xx°±1.5°	DESIGND BY:
	4/4		.xxx±0.10	.xxx°±1.0°	ZG.Hu