迈诺斯科技

MPT016N10W

Description

MPT016N10W, the N-channel Enhanced Power MOSFETs, is obtained by advanced double trench technology which reduce the conduction loss, improve switching performance and enhance the avalanche energy. This is suitable device for Motor drivers and high current switching applications.

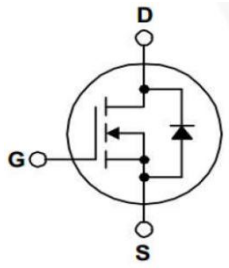

Schematic diagram

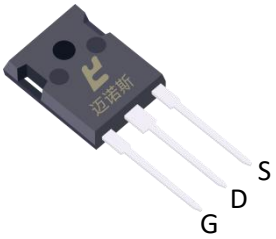

TO-247

KEY CHARACTERISTICS

① V_{DS}=100V, $R_{ds(on)}$<1.8mΩ @V_{GS}=10V, I_D=285A (Typ:1.6mΩ)
② Fast Switching
③ On-Resistance Low Gate Charge
④ Low Reverse transfer capacitance
⑤ High avalanche ruggedness
⑥ RoHS product

APPLICATIONS

① Motor drivers
② High current switching applications

ORDERING INFORMATION

Ordering Codes	Package	Product Code	Packing
MPT016N10-W	TO-247	T016N10W	Rube

ABSOLUTE RATINGS（at TC=25°C，unless otherwise specified）

Symbol	Parameter	Rating	Units
V_{DSS}	Drain-Source Voltage	100	V
I_D	Continuous Drain Current, Silicon Limited	285	A
	Continuous Drain Current, Package Limited	460	A
	Continuous Drain Current @T_C=100°C, Silicon Limited	216	A
I_{DM} Note1	Pulsed Drain Current	1050	A
V_{GS}	Gate-Source Voltage	±20	V
E_{AS} Note2	Avalanche Energy	2340	mJ
P_D	Power Dissipation	360	W
	Derating Factor above 25°C	4.33	W/℃
T_J， T_{stg}	Operating Junction and Storage Temperature Range	150，–55 to 150	℃
T_L	Maximum Temperature for Soldering	260	℃

Note1：Repetitive Rating：Pulse width limited by maximum junction temperature
Note2：L=0.5mH, Ias=70A, Start T_J=25℃

Thermal characteristics

Symbol	Parameter	Max	Units
$R_{\theta JC}$	thermal resistance, Junction-Case	0.3	℃/W
$R_{\theta JA}$	thermal resistance, Junction-Ambient	58	℃/W

Electrical Characteristics（at TC=25°C, unless otherwise specified）

OFF Characteristics

Symbol	Parameter	Test Conditions	Values			Units
			Min	Typ	Max	
V_{DSS}	Drain-Source Breakdown Voltage	V_{GS}=0V, I_D=250μA	100	110	--	V
I_{DSS}	Drain-Source Leakage Current	V_{DS}=100V, V_{GS}=0V	--	--	1	μA
		V_{DS}=80V, V_{GS}=0V @T_C=125°C	--	--	100	μA
$I_{GSS(F)}$	Gate-Source Forward Leakage	V_{GS}=+20V	--	--	100	nA
$I_{GSS(R)}$	Gate-Source Reverse Leakage	V_{GS}=-20V	--	--	-100	nA

ON Characteristics

Symbol	Parameter	Test Conditions	Values			Units
			Min	Typ	Max	
$R_{DS(on)}$	Drain-Source On-Resistance	V_{GS}=10V, I_D=50A	--	1.6	1.8	mΩ
$V_{GS(th)}$	Gate Threshold Voltage	V_{DS}=V_{GS}, I_D=250μA	2	3	4	V

Pulse width tp≤300μs, δ≤2%

Dynamic Characteristics

Symbol	Parameter	Test Conditions	Values			Units
			Min	Typ	Max	
C_{iss}	Input Capacitance	V_{DS}=20V, V_{GS}=0, f=1MHz	--	11300	--	pF
C_{oss}	Output Capacitance		--	1400	--	
C_{rss}	Reverse Transfer Capacitance		--	48	--	
Q_g	Total Gate Charge	V_{DD}=50V, I_D=100A, V_{GS}=10V	--	165	--	nC
Q_{gs}	Gate-Source charge		--	67	--	
Q_{gd}	Gate-Drain charge		--	35	--	
R_G	Gate resistance	V_{GS}=0, V_{DS}=0		2		Ω

Switching Characteristics						
Symbol	Parameter	Test Conditions	Values			Units
			Min	Typ	Max	
$t_{d(on)}$	Turn-On Delay Time	V_{DD}=50V, I_D=10A, V_{GS}=10V, R_G=3Ω, Resistive Load	--	34	--	ns
t_r	Rise Time		--	26	--	
$t_{d(off)}$	Turn-Off Delay Time		--	78	--	
t_f	Fall Time		--	30	--	

Source-Drain Diode Characteristics						
Symbol	Parameter	Test Conditions	Values			Units
			Min	Typ	Max	
I_S	Continuous Source Current		--	--	285	A
I_{SM}	Maximum Pulsed Current		--	--	1050	A
V_{SD}	Diode Forward Voltage	V_{GS}=0V, I_S=50A	--	--	1.2	V
T_{rr}	Reverse Recovery Time	I_s=100A, V_{GS}=0, di/dt=100A/us	--	100	--	ns
Q_{rr}	Reverse Recovery Charge		--	323	--	nC

Characteristics Curves

Figure 1. Safe Operating Area

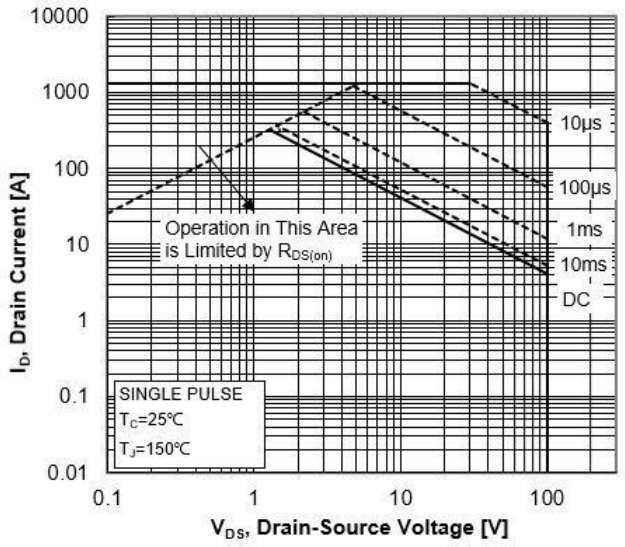

Figure 2. Maximum Power Dissipation vs Case Temperature

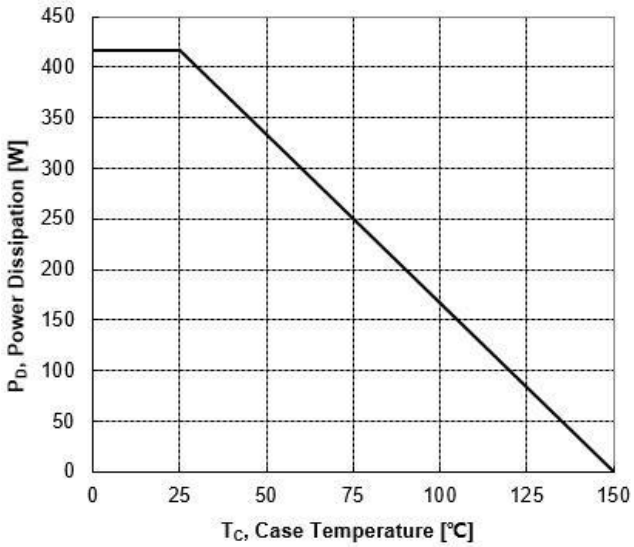

Figure 3. Maximum Continuous Drain Current vs Case Temperature

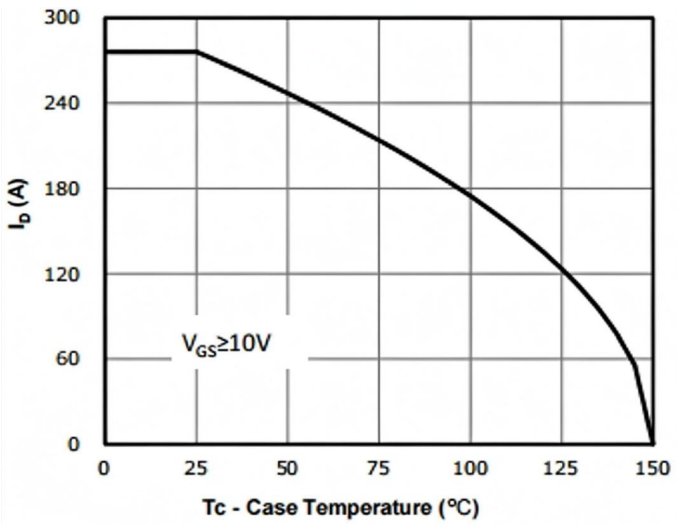

Figure 4. Typical Output Characteristics

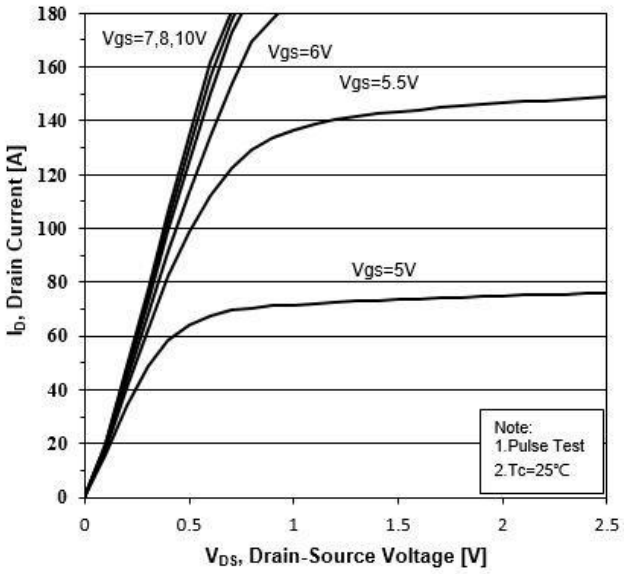

Figure 5. Transient Thermal Impedance

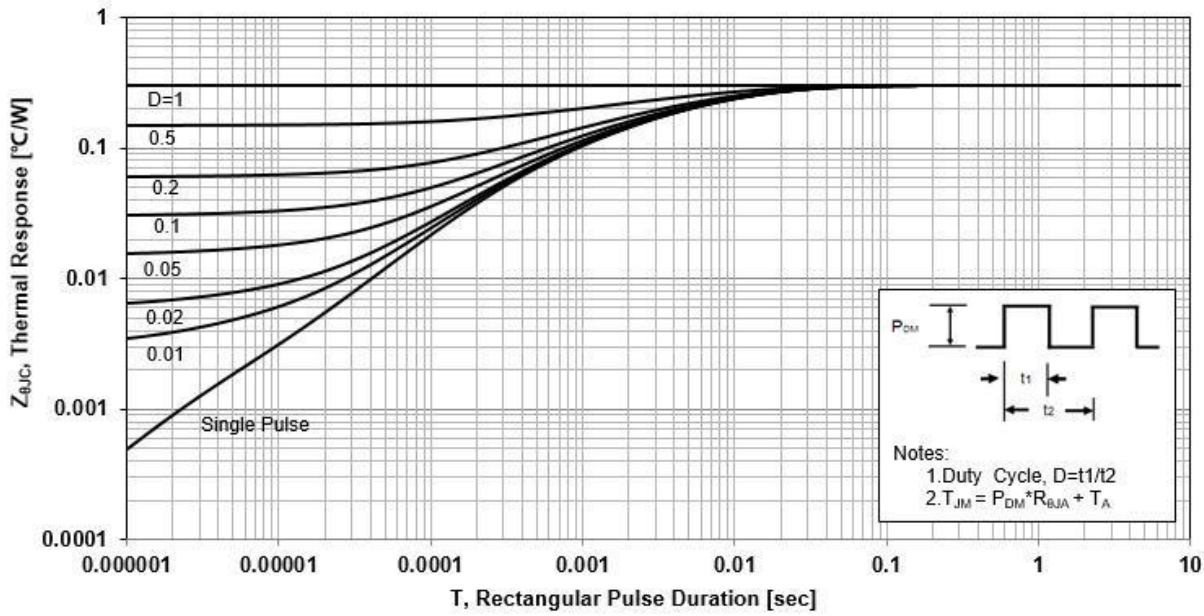

Figure 6. Typical Transfer Characteristics

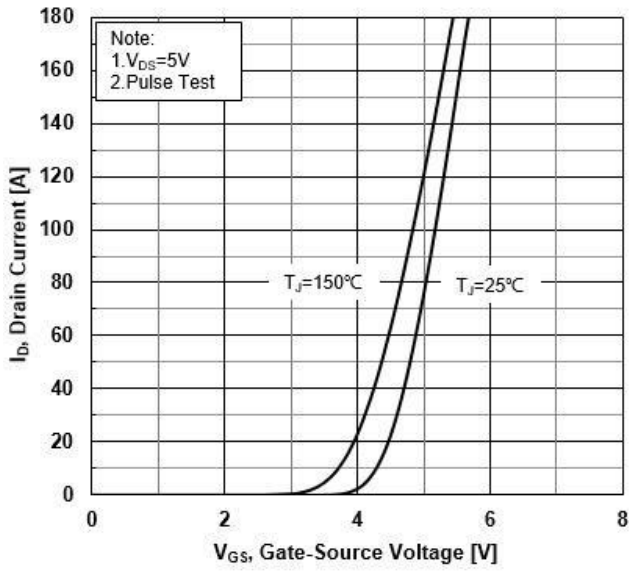

Figure 7. Source-Drain Diode Forward Characteristics

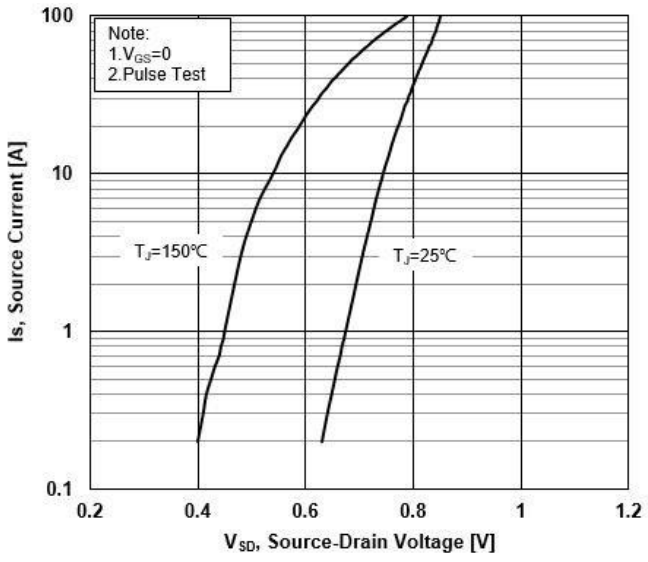

Figure 8. Drain-Source On-Resistance vs Drain Current

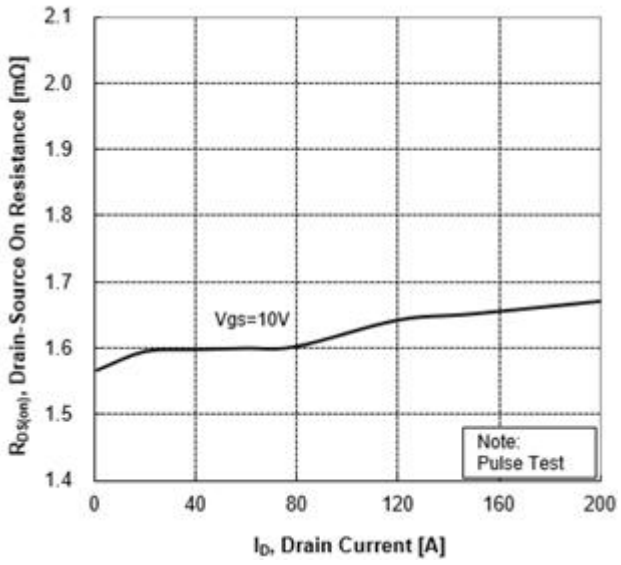

Figure 9. Normalized On-Resistance vs Junction Temperature

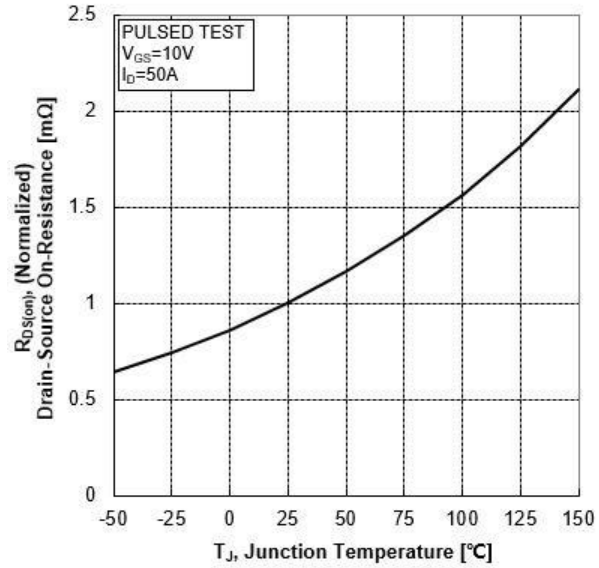

Figure 10. Normalized Threshold Voltage vs Junction Temperature

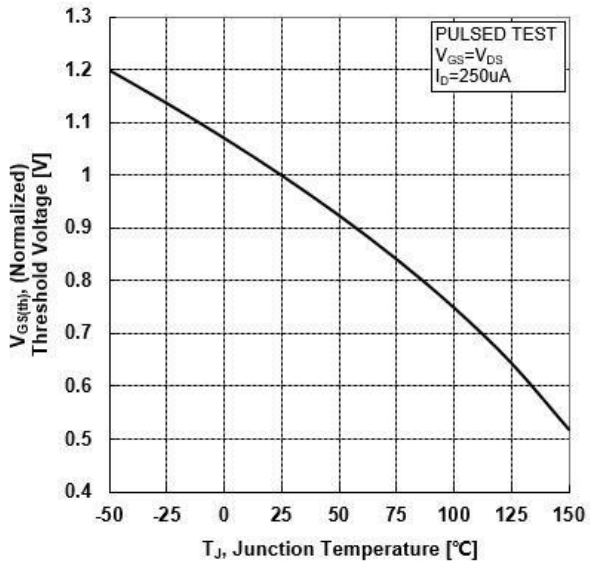

Figure 11. Normalized Breakdown Voltage vs Junction Temperature

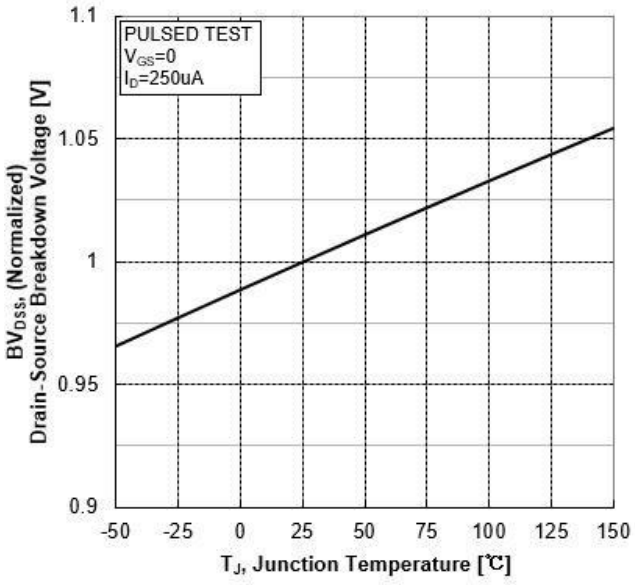

Figure 12. Capacitance Characteristics	Figure 13. Typical Gate Charge vs Gate-Source Voltage
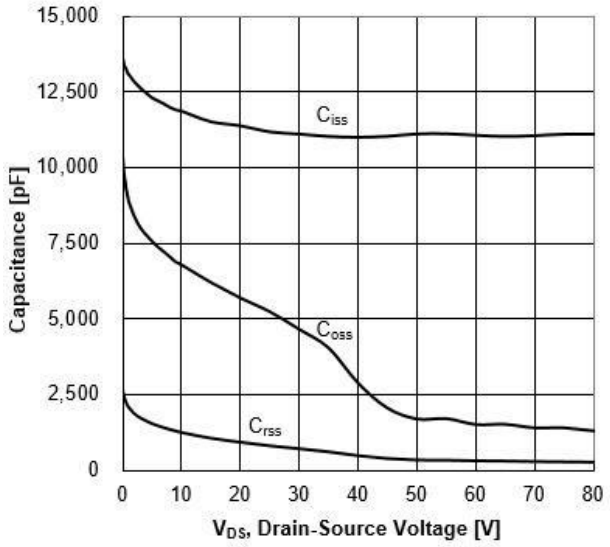	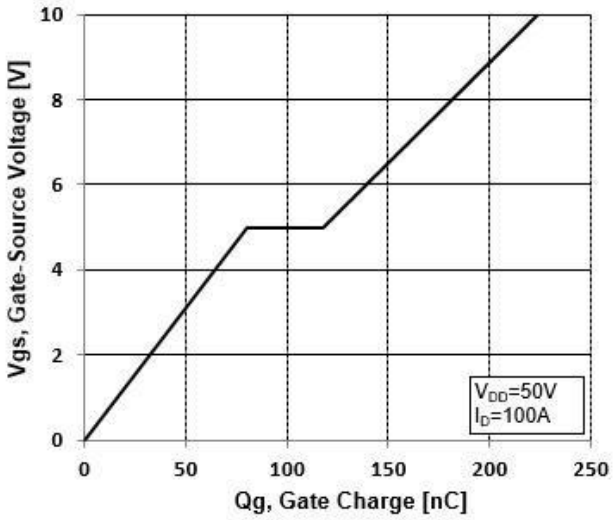

Test Circuit and Waveform

Figure 14. Resistive Switching Test Circuit	Figure 15. Resistive Switching Waveforms
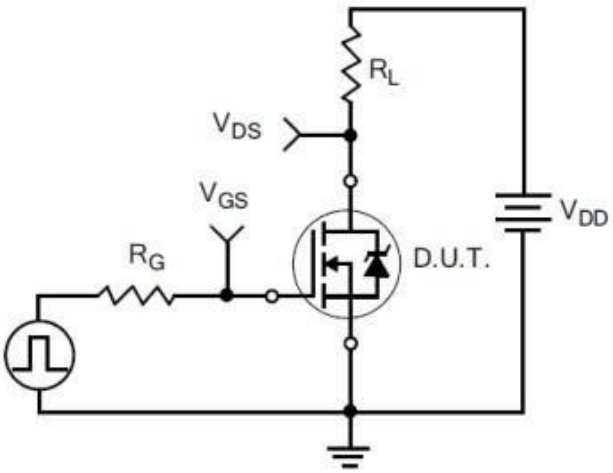	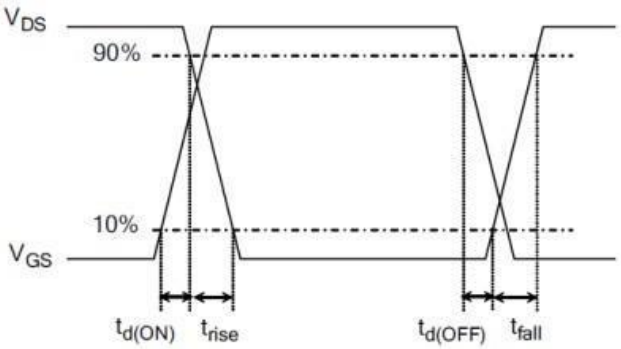

Figure 16. Gate Charge Test Circuit	Figure 17. Gate Charge Waveforms
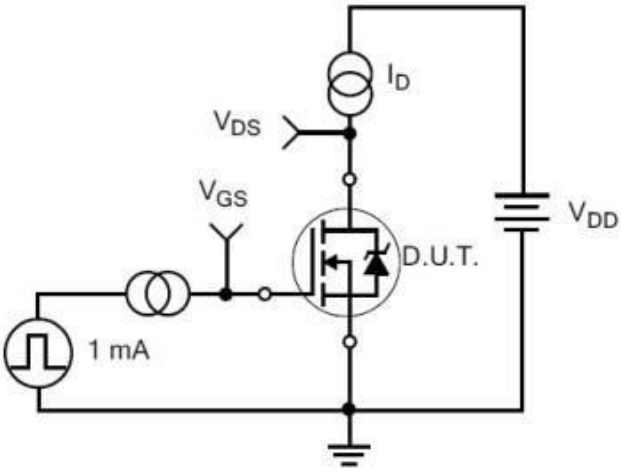	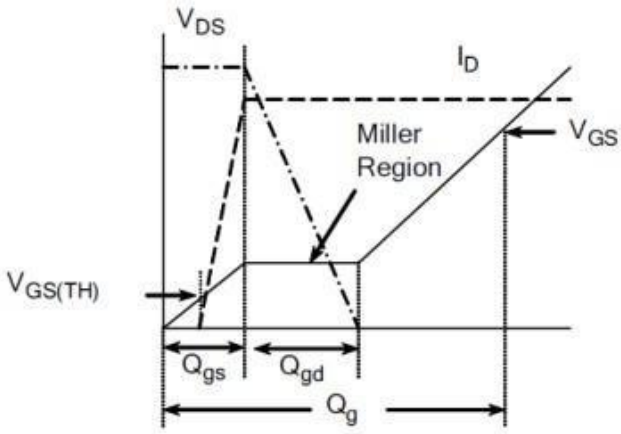

Figure 18. Diode Reverse Recovery Test Circuit	Figure 19. Diode Reverse Recovery Waveform
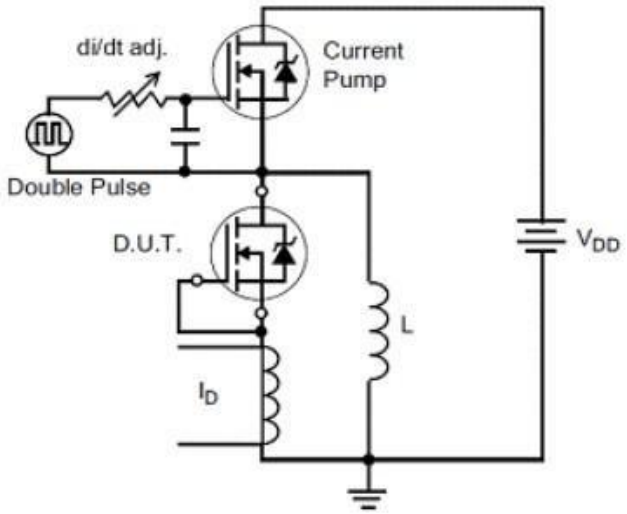	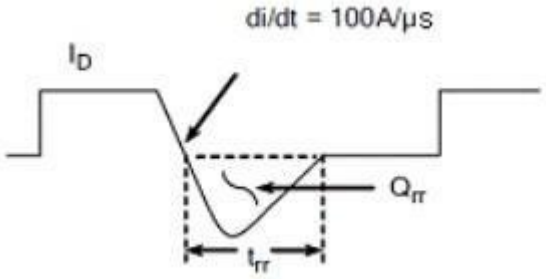

Figure 20. Unclamped Inductive Switching Test Circuit	Figure 21. Unclamped Inductive Switching Waveform
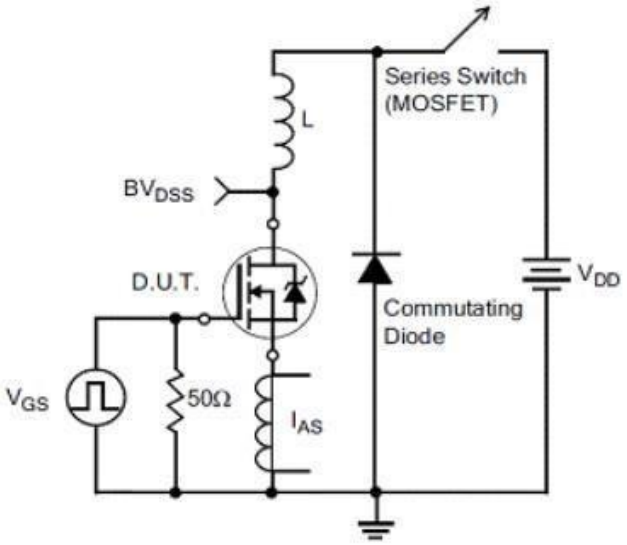	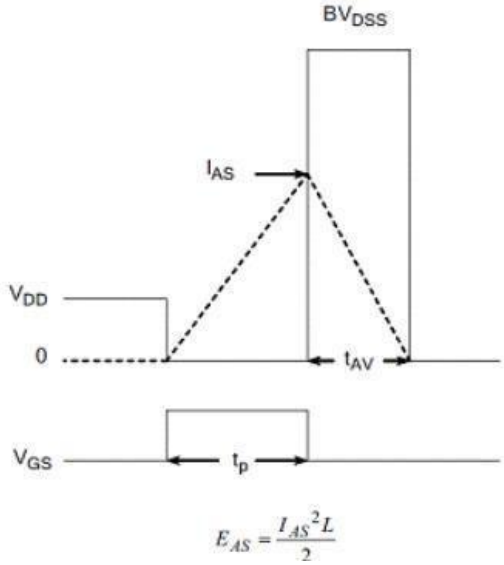

$$E_{AS} = \frac{I_{AS}^2 L}{2}$$

Package Description

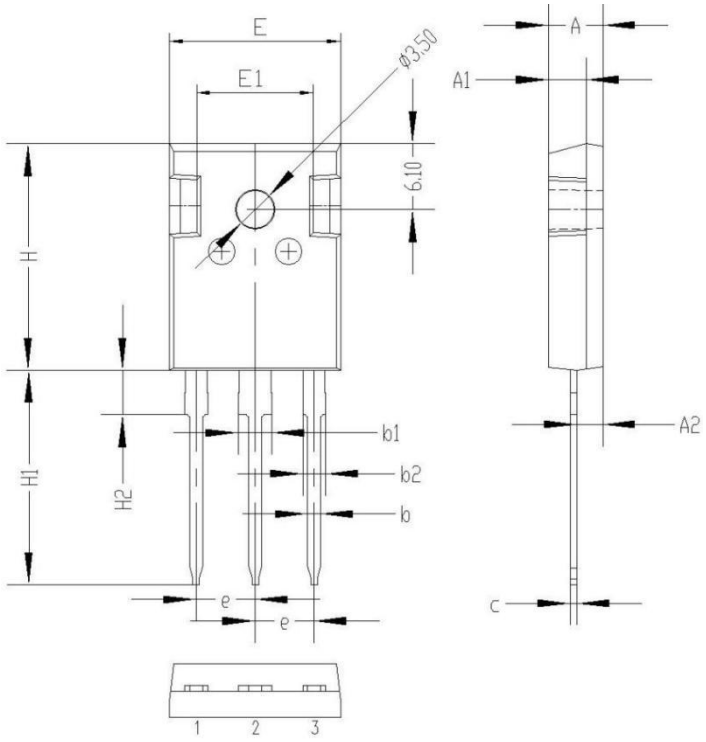

Symbol	Values（mm）		
	MIN	TYP	MAX
A	4.8	5.00	5.20
A1	3.3	3.5	3.7
A2	2.20	2.40	2.60
b	1.00	1.2	1.40
b1	2.90	3.10	3.30
b2	1.80	2.00	2.20
c	0.50	0.60	0.70
e	5.25	5.45	5.65
E	15.2	15.7	16.2
H	20.8	21	21.2
H1	19.5	20.0	20.5
H2	3.9	4.1	4.3
G	5.9	6.1	6.3
ΦP	3.30	3.50	3.70

TO-247 Package

NOTE:

1. Exceeding the maximum ratings of the device in performance may cause damage to the device, even the permanent failure, which may affect the dependability of the machine. Please do not exceed the absolute maximum ratings of the device when circuit designing.
2. When installing the heat sink, please pay attention to the torsional moment and the smoothness of the heat sink.
3. MOSFETs is the device which is sensitive to the static electricity, it is necessary to protect the device from being damaged by the static electricity when using it.
4. Shenzhen Minos reserves the right to make changes in this specification sheet and is subject to change without prior notice.

CONTACT:

深圳市迈诺斯科技有限公司（总部）

地址：深圳市福田区华富街道田面社区深南中路4026号田面城市大厦16D

邮编：518025

电话：0755-83273777