RoHS Compliant

REV.	DESCRIPTION	SIGN	DATE
A	NEW	Fred.Tong	2018/05/27

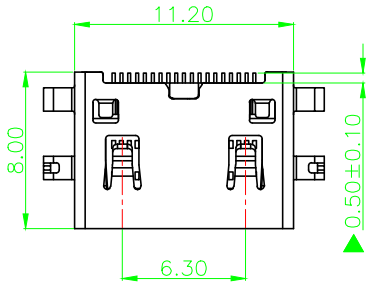

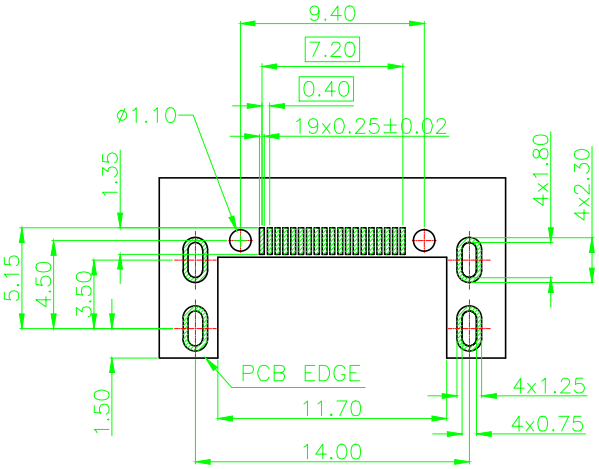

RECOMMENDED PCB LAYOUT

GENERAL TOLERANCES:±0.05

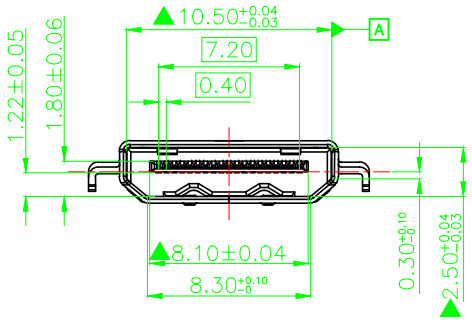

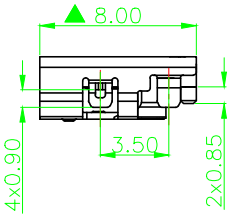

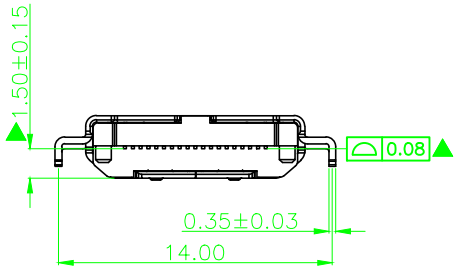

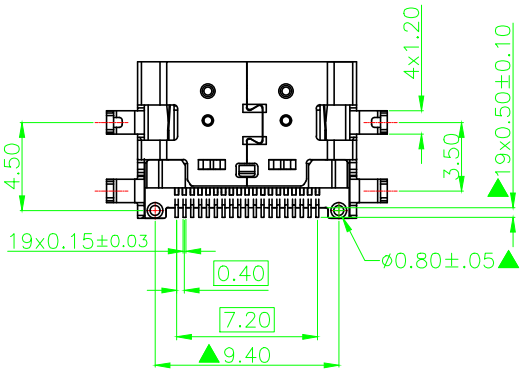

NOTES:

1.ELECTRONIC:
- CONTACT RESISTANCE: 30mohm MAX
- INSULATION RESISTANCE: 1000 Mohm MIN
- WITHSTAND VOLTAGE:AC 500V,1min.

2.MECHANICAL:
- DURABILITY: 10000 CYCLE.

3.ENVIRONMENT CHARACTERISTICS:
- OPERTING TEMPERATURE:−55°C TO +105°C

4.RECOMMANDER PCB THICKNESS 1.0 TO 1.20MM

5.标示"▲"符号的尺寸为重点检验尺寸。

6.MATERIAL LIST:

No.	PART NAME	QTY	MATERIAL	REMARK
3	SHELL	1	C2680 T=0.30	AU 0.8U PLATED
2	CONTACT	19	C2680 T=0.10	AU 1U+GF PLATED
1	HOUSING	1	THERMOPLASTIC(LCP)	(UL 94V-0) BLACK

GENERAL TOLERANCES (UNLESS SPECIFIIED)		
ITEM	MM	INCH
3 PLACE	±0.15	±0.005
2 PLACE	0.25	±0.01
1 PLACE	±0.35	±0.015
0 PLACE	±0.50	±0.02
ANGULAR ± 3°		
METRIC	U.S.	
MM	~~INCHES~~	

DRAWN BY Alen.Yu DATE 2018/05/27

CHECKED BY Fred.Tong DATE 2018/05/27

APPROVED BY DATE

ANGLE OF PROJECTION

东莞市文章济美电子有限公司

TITLE:
HDMI C FEMALE SMT 沉板
H1.50(平口) 无 LOGO

SIZE A4

PART NO. BHDF19B1A11201W-B

SCALE N/A

SHEEL 1 OF 1

REV. A