Process Capable | RoHS Compliant 2011/65/EU | Compliant Halogen Free

| REV. | ECN NO OR DESCRIPTION | REVISED | DATE |
|---|---|---|---|
| A | NEW RELEASE | Curry | 2024/07/20 |

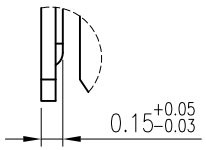


DETAIL:B
SCALE:2/1

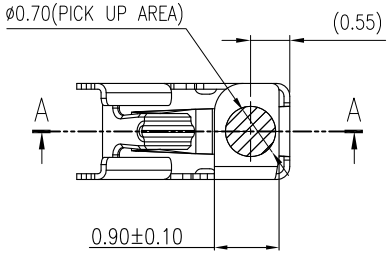


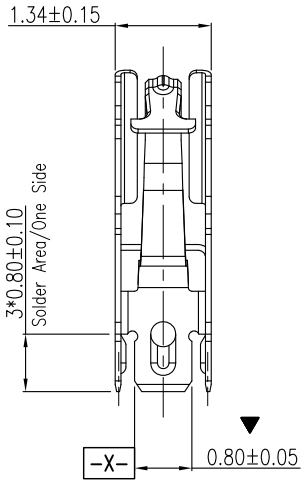


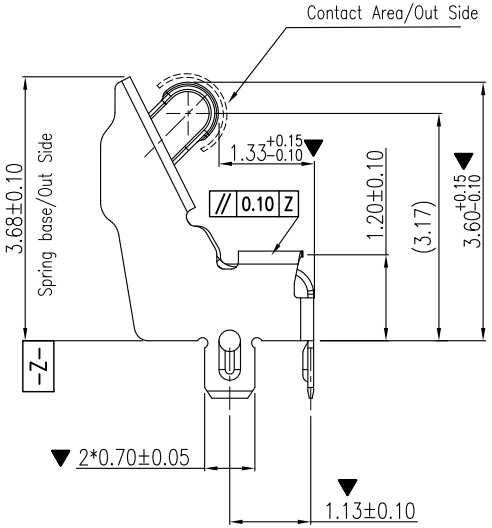


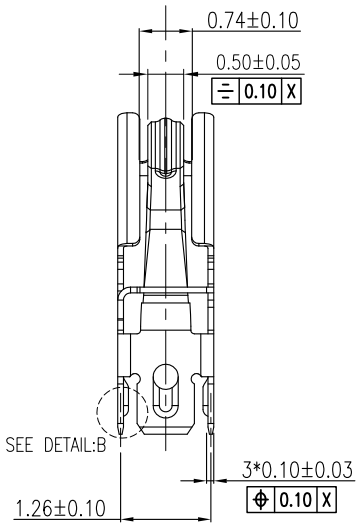


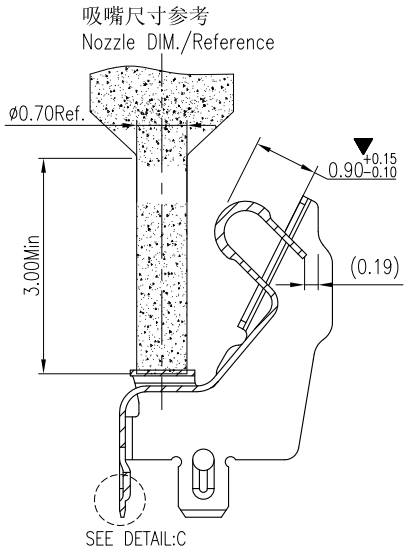


SECTION:A-A

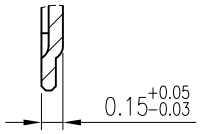


DETAIL:C
SCALE:2/1

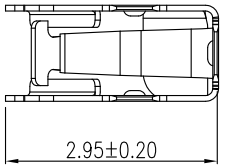


| NO. | PART NO. | QT'Y | MATERIAL | NOTE |
|---|---|---|---|---|
| 1 | EPR317-01A10-02 | 1 | STAINLESS STEEL | 50~150u"Ni+Au10u" PLATING ON CONTACT AREA.<br>50~150u"Ni PLATING ON BASE AREA.<br>50~150u"Ni+Au1u" PLATING ON SOLDER AREA. |

UNLESS OTHERWISE SPECIFED TOLERANCES

DECIMALS: ANGLES:
X :±0.5 X :±2°
X.X :±0.20 X.X :±1°
X.XX :±0.15
X.XXX :±0.005

深圳市精睿兴业科技有限公司
SHENZHEN KRCONN TECHNOLOGY CO. , LTD

| | | | | |
|---|---|---|---|---|
| TITLE | Side contact of Earbuds with charging shrapnel | | | |
| DWN | Curry.W | PART NO. EPR317-01A10-02 | | |
| CHKD | Curry.W | SCALE:1:1 | UNIT: mm | |
| APVD | Kevin.D | SIZE: A4 | SHEET: 1/2 | REV: A |

CUSTOMER DRAW

| REV. | ECN NO OR DESCRIPTION | REVISED | DATE |
|---|---|---|---|
| A | NEW RELEASE | Curry | 2024/07/20 |

Process Capable | RoHS Compliant 2011/65/EU | Compliant Halogen Free

NOTES:
(1)MATERIAL: STAINLESS STEEL,T=0.08mm
(2)FINISH:
2-1:PLATING SPC. SEE BOM TABLE
2-2:NOT WITH TOLERANCE WITCH REFERENCE TO THE TOLERANCE TABLE,NOT ASTANDARD SIZE REFERENCE 3D.
2-3:METAL MASK AND PCB LAYOUT DESIGN SIZE, FOR REFERENCE ONLY, ON THE BASIS OF CUSTOMER ACTUAL DESIGN.
(3)PRODUCT SPECIFICATIONS:
3-1 COURRENT RATING: 1.5A
3-2 RATING VOITEG:5.0V.
3-3 CONTACT RESISTANCE:50mOHM MAX ,
AFTER DURABLITY ENVIRONMENT: △R=20mOHM
3-4 OPERATION TEMPERATURE: -55°C ~ +85°C
3-5 NORMAL FORCE OF PRESS 0.57MM:28±10gf
(4)DURABILITY:10,000 CYCLES. YIELD NO EXCEED 0.1MM.
(5)DIMENSIONS MARKEDW "▼" IS KEY DIMENSION:
(6)SALT SPRAY TIME: 48H (JUDGED BY ALL OUTSIDE AREA)
(7)COMPLIANT WITH ROHS STANDARD.
(8)PLEASE CONTACT KRCONN SALES REPRESENTATIVE TO VERIFY

EPR 317 - 01 A10 - 01

PRODUCT ORDER
- 317: On Board Hight (CONTACT POINT)/317=3.17mm
- 01: Materail/1=STAINLESS STEEL
- A10: Plating On Contact Area.:SEE THE TABLE
- 01: Servies Number.

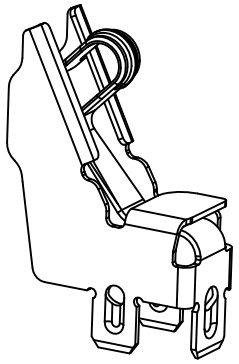

3D VIEW

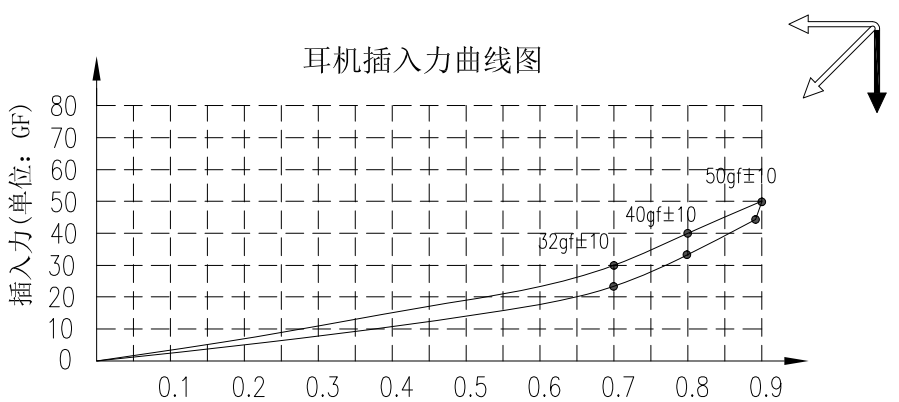


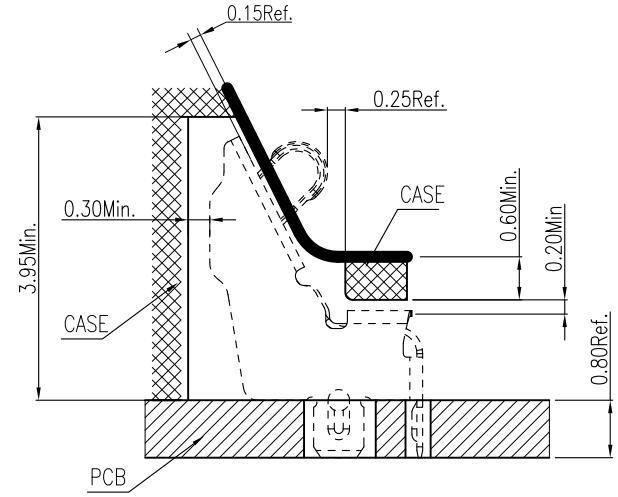


Structural design reference

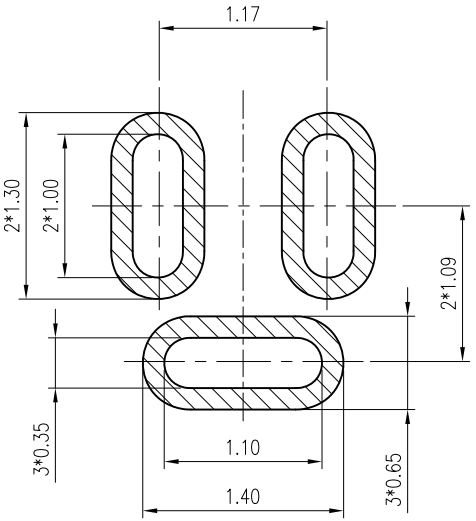


RECOMMENDED PCB LAYOUT (TOLERANCE:±0.05)
SCALE 2:1

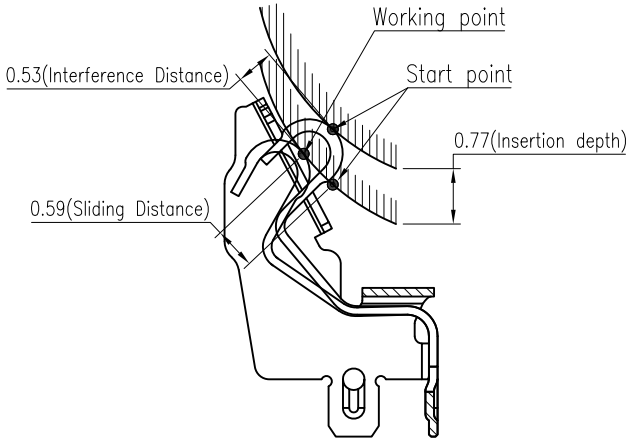


Simulation reference

UNLESS OTHERWISE SPECIFED TOLERANCES

DECIMALS: ANGLES:
X :±0.5 X :±2°
X.X :±0.20 X.X :±1°
X.XX :±0.15
X.XXX :±0.005

深圳市精睿兴业科技有限公司
SHENZHEN KRCONN TECHNOLOGY CO. , LTD

| | | | | |
|---|---|---|---|---|
| TITLE | Side contact of Earbuds with charging shrapnel | | | |
| DWN | Curry.W | PART NO. EPR317-01A10-02 | | |
| CHKD | Curry.W | SCALE:1:1 | UNIT: mm | |
| APVD | Kevin.D | SIZE: A4 | SHEET: 2/2 | REV: A |

CUSTOMER DRAW

Process Capable | RoHS Compliant 2011/65/EU | Compliant Halogen Free

| REV. | ECN NO OR DESCRIPTION | REVISED | DATE |
|---|---|---|---|
| A | NEW RELEASE | Curry | 2024/07/20 |

| CONN. PART NO. | CONN. QTY./REEL | REEL QTY./CARTON | CONN. QTY./CARTON | CARTON SIZE |
|---|---|---|---|---|
| EPR317-XXXXX-02 | 1500 | 18 | 27,000 | 345x345x340 |

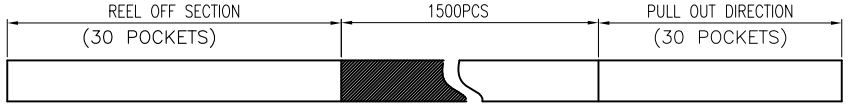


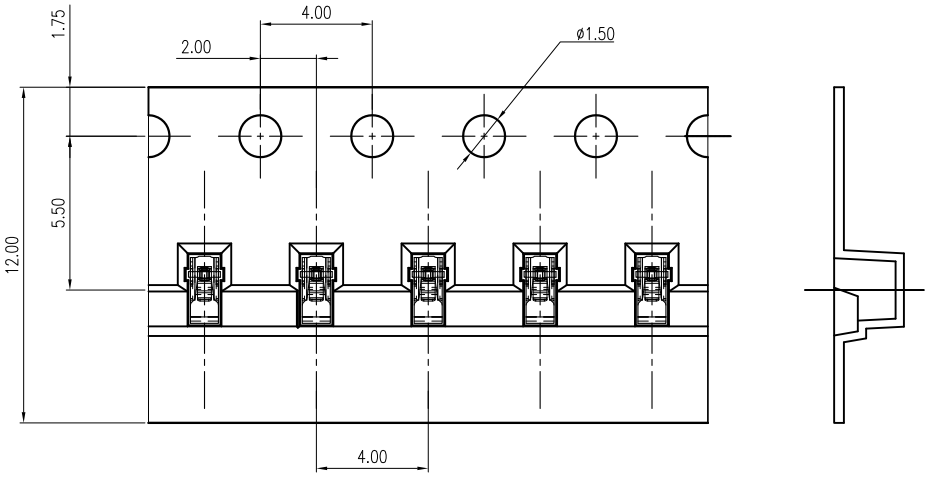


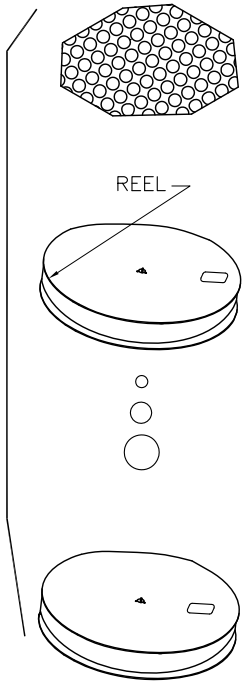


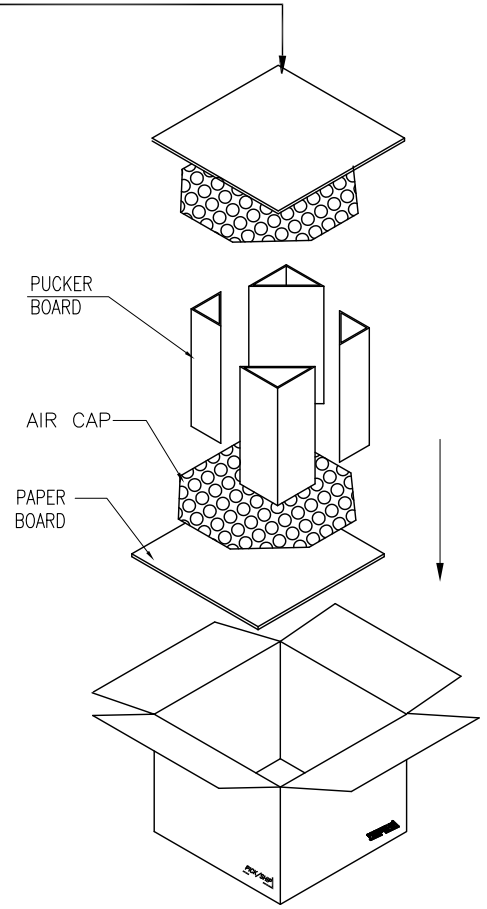


CUSTOMER TO USE DIRECTION ⟹

PULL OUT DIRECTION
(出料方向)

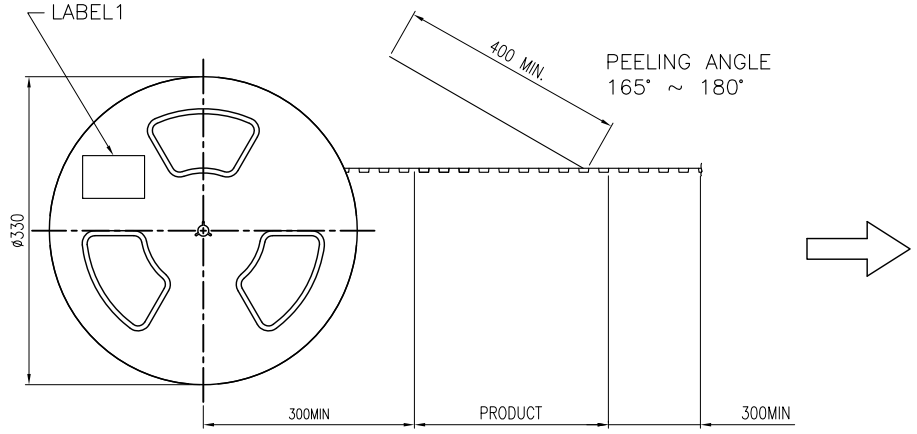


UNLESS OTHERWISE SPECIFED TOLERANCES

DECIMALS: X :±0.5, X.X :±0.20, X.XX :±0.15, X.XXX :±0.005

ANGLES: X :±2°, X.X :±1°

深圳市精睿兴业科技有限公司
SHENZHEN KRCONN TECHNOLOGY CO. , LTD

| | | | | |
|---|---|---|---|---|
| TITLE | Side contact of Earbuds with charging shrapnel | | | |
| DWN | Curry.W | PART NO. EPR317-XXXXX-02 | | |
| CHKD | Curry.W | SCALE:1:1 | UNIT: mm | |
| APVD | Kevin.D | SIZE: A4 | SHEET: 1/1 | REV: A |

CUSTOMER DRAW