Process Capable | RoHS Compliant 2011/65/EU | Compliant Halogen Free

REV.	ECN NO OR DESCRIPTION	REVISED	DATE
A0	NEW RELEASE	Curry	2024.09.23
B0	Modify Design	Curry	2024.10.11

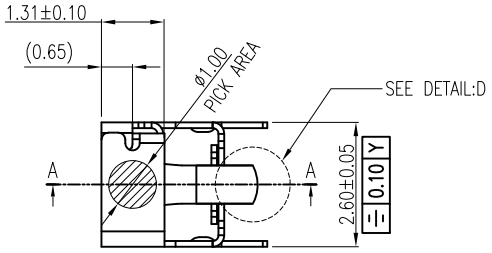

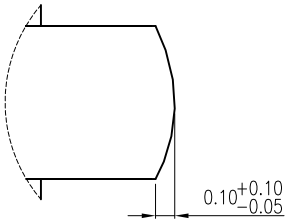

DETAIL:D–D
SCALE 2:1

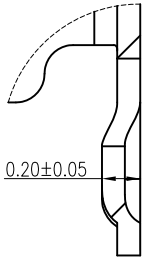

DETAIL:C–C
SCALE 2:1

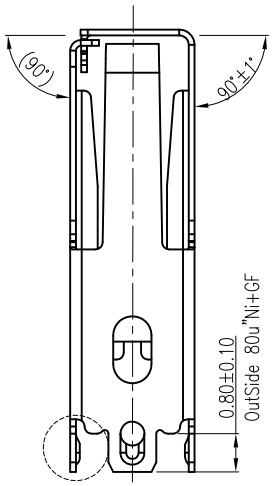

SEE DETAIL:B

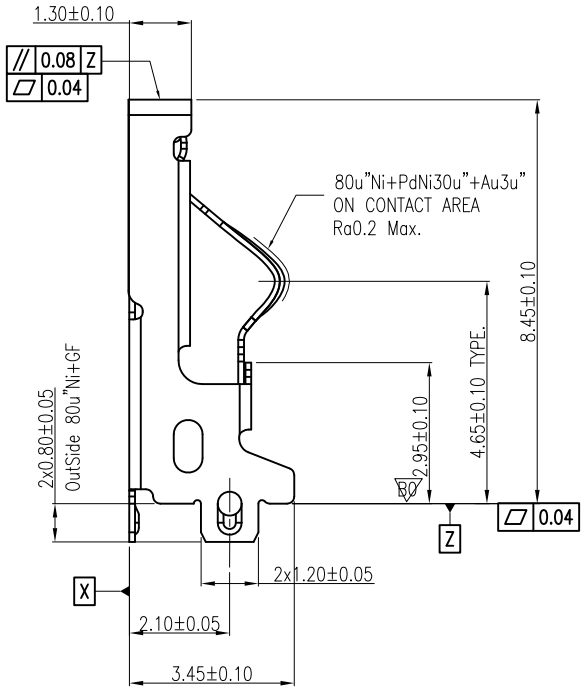

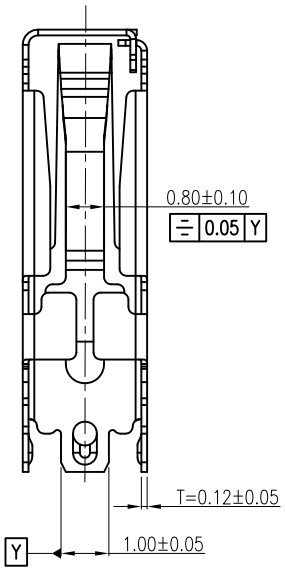

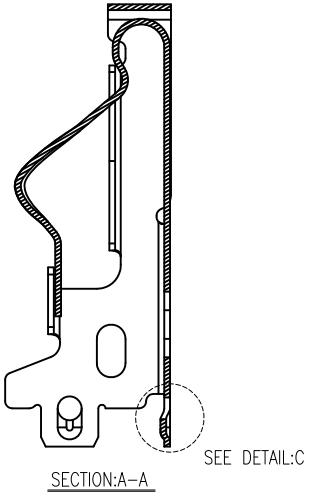

SECTION:A–A

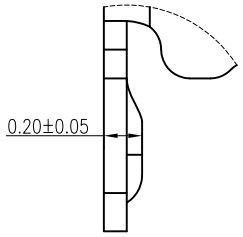

DETAIL:B–B
SCALE 2:1

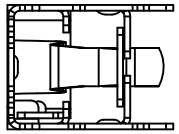

NO.	PART NO.	QT'Y	MATERIAL	NOTE
1	EPR465-01C12-01	1	SUS301 1/2H	CONTACT Area: 80u"Ni+PdNi30u"+Au3u" SOLDER Tail area: 80u"Ni+G/F Other Area: 80u"Nl

UNLESS OTHERWISE SPECIFED TOLERANCES

DECIMALS: ANGLES:
X :±0.5 X :±2°
X.X :±0.20 X.X :±1°
X.XX :±0.15
X.XXX :±0.005

深圳市精睿兴业科技有限公司
SHENZHEN KRCONN TECHNOLOGY CO. , LTD

TITLE	Side contact of Earbuds with charging shrapnel			
DWN	Curry.W	PART NO. EPR465-01C12-01		
CHKD	Curry.W	SCALE:1:1	UNIT: mm	
APVD	Kevin.D	SIZE: A4	SHEET: 1/2	REV: B0

CUSTOMER DRAW

REV.	ECN NO OR DESCRIPTION	REVISED	DATE
A0	NEW RELEASE	Curry	2024.09.23
B0	Modify Design	Curry	2024.10.11

Process Capable | RoHS Compliant 2011/65/EU | Compliant Halogen Free

NOTES:
(1)MATERIAL:SUS301 1/2H ,T=0.12mm
(2)FINISH:
2-1:PLATING SPC. SEE BOM TABLE
2-2:NOT WITH TOLERANCE WITCH REFERENCE TO THE TOLERANCE TABLE,NOT ASTANDARD SIZE REFERENCE 3D.
2-3:METAL MASK AND PCB LAYOUT DESIGN SIZE, FOR REFERENCE ONLY, ON THE BASIS OF CUSTOMER ACTUAL DESIGN.
(3)PRODUCT SPECIFICATIONS:
3-1 COURRENT RATING: 1.5A
3-2 RATING VOITEG:5.0V.
3-3 CONTACT RESISTANCE:50mOHM MAX ,
AFTER DURABLITY ENVIRONMENT: Δ R=20mOHM
3-4 OPERATION TEMPERATURE: -55°C ~ +85°C
3-5 Normal FORCE OF PRESS 0.70MM: 55±8gf
(4)DURABILITY:10,000 CYCLES. YIELD NO EXCEED 0.1MM.
(5)DIMENSIONS MARKEDW "▼" IS KEY DIMENSION:
(6)SALT SPRAY TIME: 48H (JUDGED BY ALL OUTSIDE AREA)
(7)COMPLIANT WITH ROHS STANDARD.
(8)PLEASE CONTACT KRCONN SALES REPRESENTATIVE TO VERIFY

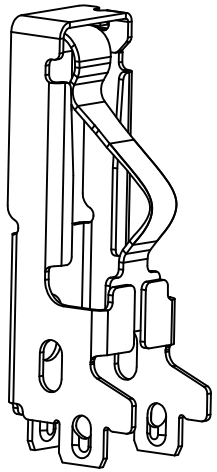

EPR 465-01 C12 -01
PRODUCT ORDER
- On Board Hight (CONTACT POINT)/465=4.65mm
- Materail/1=STAINESS STEEL
- Plating On Contact Area.:SEE THE TABLE
- Servies Number.

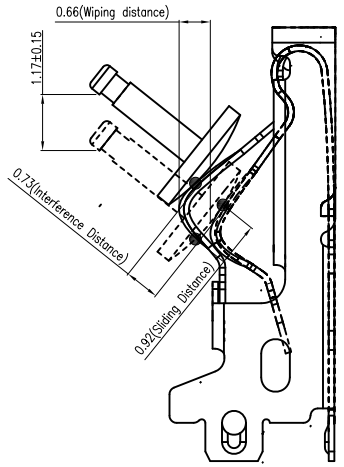

Simulation reference

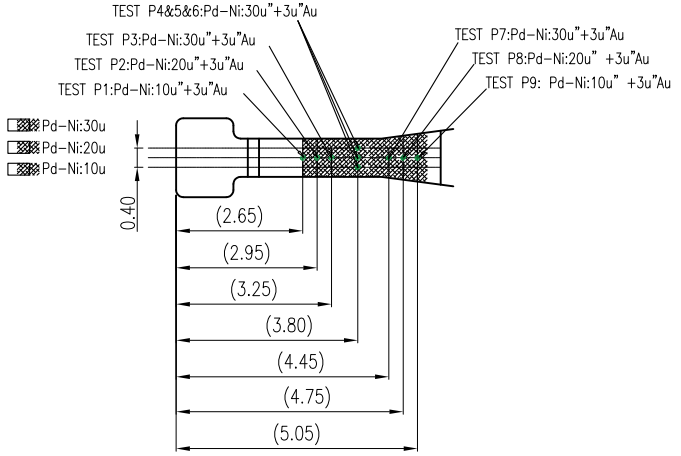

Plating Test Point

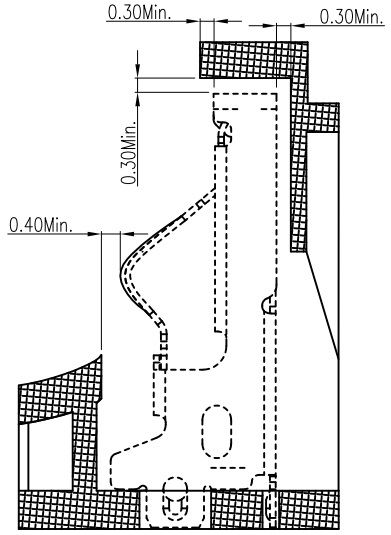

Structural design reference

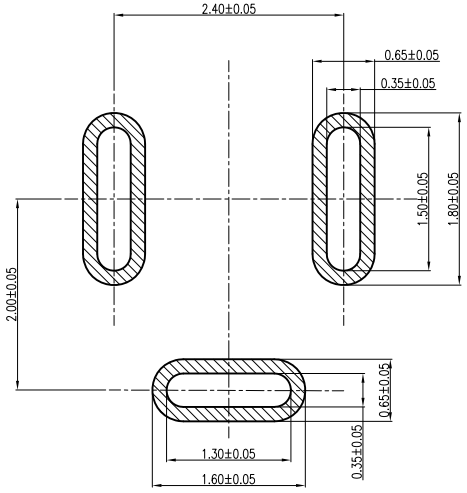

RECOMMENDED PCB LAYOUT (TOLERANCE:±0.05)
SCALE 2:1

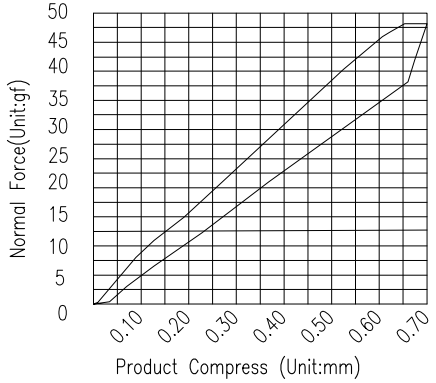

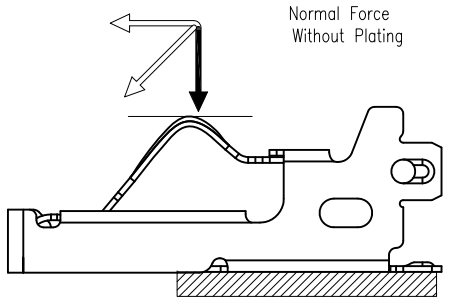

UNLESS OTHERWISE SPECIFED TOLERANCES

DECIMALS: ANGLES:
X :±0.5 X :±2°
X.X :±0.20 X.X :±1°
X.XX :±0.15
X.XXX :±0.005

深圳市精睿兴业科技有限公司
SHENZHEN KRCONN TECHNOLOGY CO. , LTD

TITLE	Side contact of Earbuds with charging shrapnel			
DWN	Curry.W	PART NO. EPR465-01C12-01		
CHKD	Curry.W	SCALE:1:1	UNIT: mm	
APVD	Kevin.D	SIZE: A4	SHEET: 2/2	REV: B0

CUSTOMER DRAW