This document is the property of Xinshengyue Corporation and is delivered on the express condition that it is not to be disclosed, reproduced or used, in whole or in part, for manufacture or sale by anyone other than Xinshengyue Corporation without its prior concert&that no right is granted to disclose or to use any information in this document.

REV.	ECN NO.	DESCRIPTION	DATE	DESIGN
A	ECN NO.	INITIAL RELEASED	2026.10.05	JASON

RoHS Compliant

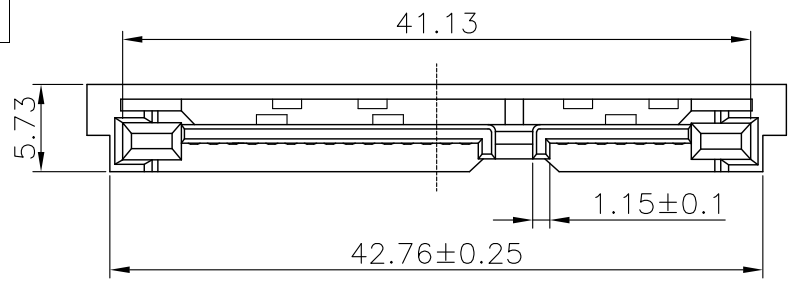

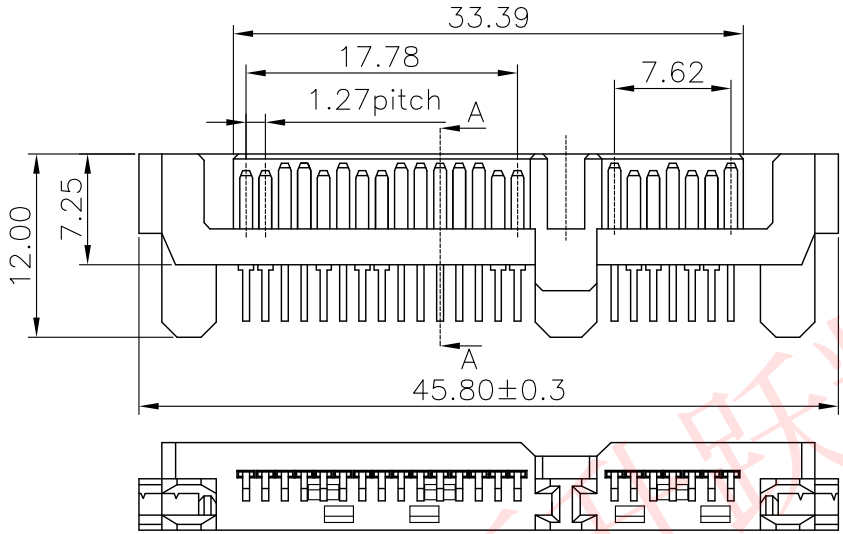

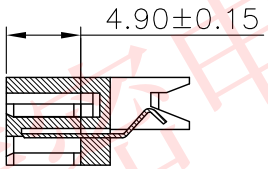

SECTION A–A

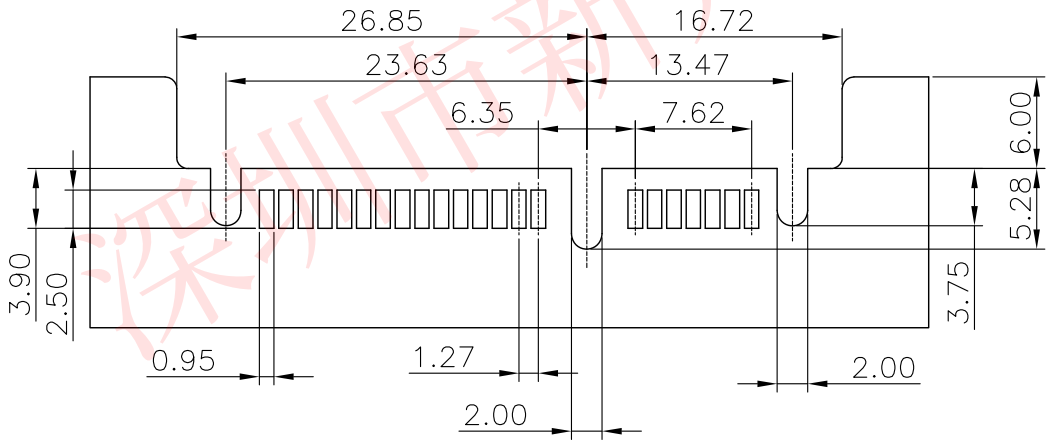

PCB LAYOUT

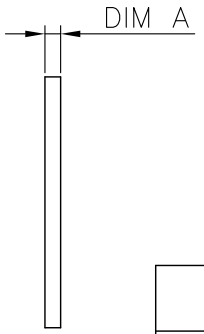

NOTE:
1. MATERIAL:
HOUSING: LCP WITH 30% GF, UL 94V–0, BLACK COLOR.
TERMINAL:COPPER ALLOY.

2.ELECTRICAL:
CURRENT RATING:1.5AMPERE PER CONTACT
CONTACT RESISTANCE:30 MILLIOHMS MAX
INSULATION RESISTANCE:1000 MEGOHMS MIN
DIELECTRIC WITH STANDING VOVTAGE:500 VDC
OPERATING TEMPERATURE:–25°C ~ +85°C

3. PART NUMBER DESCRIPTION:

P/N: 106001-321221

- 3:STRADDLE
- PACKAGING 2: TRAY
- CONTACT AREA PLATED 1: Au G/F
- PIN NUMBER:22PIN
- SEE TABLE A

TABLE A

DIM A	PART NO.	塑胶区别
1.0	106001-32X221	中间有缺口/七个孔
1.2	106001-32X222	七个孔
1.6	106001-32X223	七个孔
0.8	106001-32X224	七个孔

TOLERANCE		NAME(INTENDED USE) CUSTOMER DRAWING	XSUA® 深圳市新升跃精密电子有限公司 SHENZHEN XINSHENGYUE PRECISION ELECTRONICS CO., LTD
X.X ±0.30	X.° ±10°	PART NO. SEE P/N	TITLE: SATA 7+15P夹板公座
.XX ±0.20	.X° ± 8°		
.XXX ±0.10	.XX° ± 5°	DESIGN: JASON	DRAWG NO. C–106001
UNIT	mm	CHED: CHECK	SCALE 1:1 / SHEET 1/2 / REV. A
MATERIAL	---	APPD: ARAY	
FINISH	---		

深圳市新升跃精密电子有限公司

This document is the property of Xinshengyue Corporation and is delivered on the express condition that it is not to be disclosed, reproduced or used, in whole or in part, for manufacture or sale by anyone other than Xinshengyue Corporation without its prior concert&that no right is granted to disclose or to use any information in this document.

REV.	ECN NO.	DESCRIPTION	DATE	DESIGN
A	ECN NO.	INITIAL RELEASED	2026.10.05	JASON

RoHS Compliant

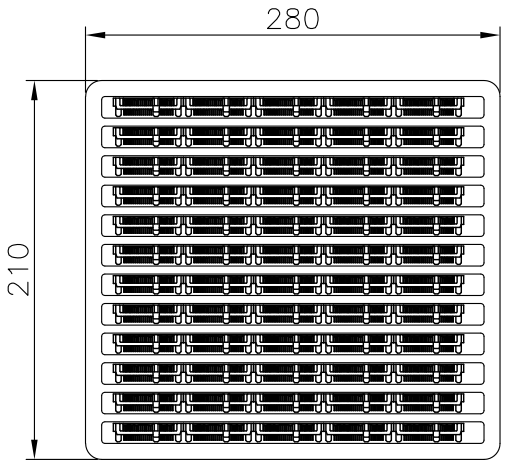

一吸塑盒=60PCS

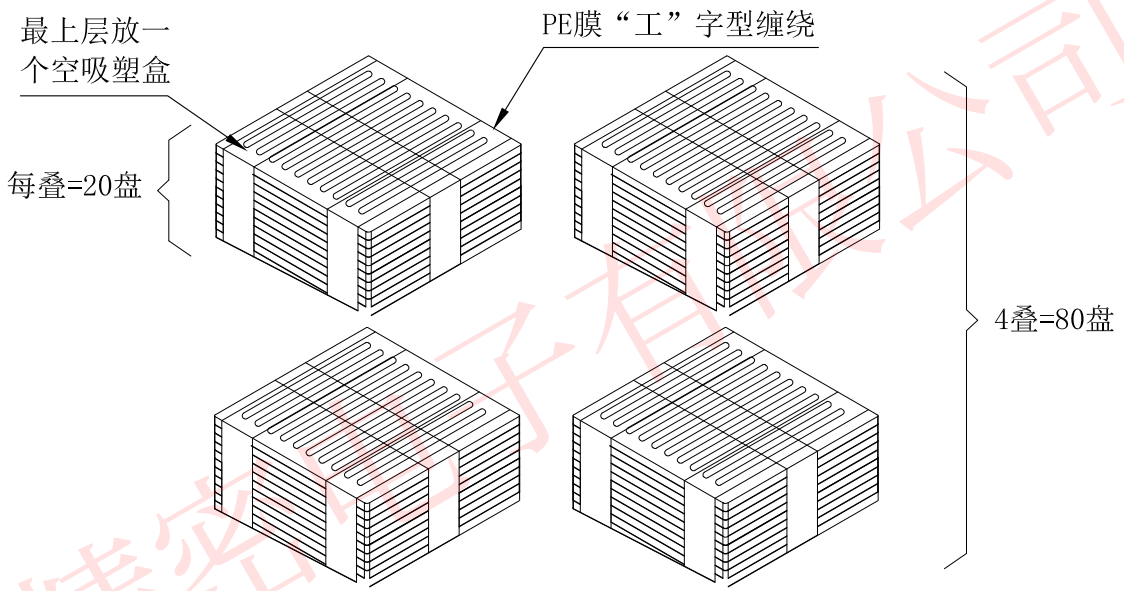

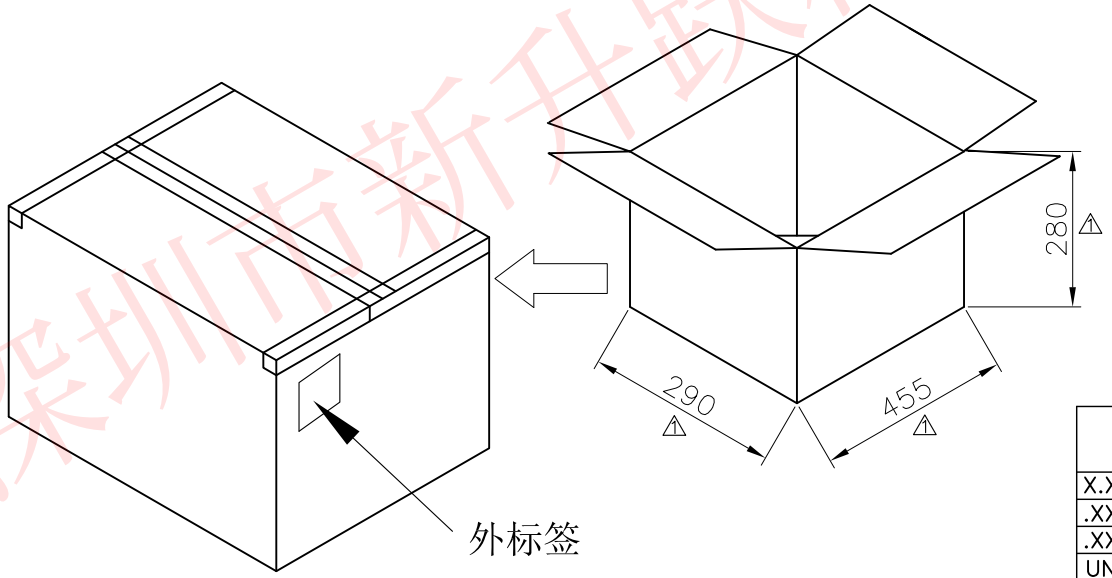

⚠ 说明:

1. 一盘吸塑盒=60 PCS
2. 每叠20盘=60 PCS/盘*20
   =1200 PCS
3. 一箱=4叠=每叠1200 PCS *4
   =4800 PCS/箱

TOLERANCE		NAME(INTENDED USE) CUSTOMER DRAWING	XSUA® 深圳市新升跃精密电子有限公司 SHENZHEN XINSHENGYUE PRECISION ELECTRONICS CO., LTD
X.X ±0.30	X.° ±10°	PART NO. SEE P/N	TITLE: SATA 7+15P夹板公座
.XX ±0.20	.X° ± 8°		
.XXX ±0.10	.XX° ± 5°	DESIGN: JASON	DRAWG NO. C-106001
UNIT	mm	CHED: CHECK	SCALE 1:1 / SHEET 2/2 / REV. A
MATERIAL	---	APPD: ARAY	
FINISH	---		

深圳市新升跃精密电子有限公司