This document is the property of Xinshengyue Corporation and is delivered on the express condition that it is not to be disclosed, reproduced or used, in whole or in part, for manufacture or sale by anyone other than Xinshengyue Corporation without its prior concert&that no right is granted to disclose or to use any information in this document.

REV.	ECN NO.	DESCRIPTION	DATE	DESIGN
A	ECN NO.	INITIAL RELEASED	2026.10.05	JASON

RoHS Compliant

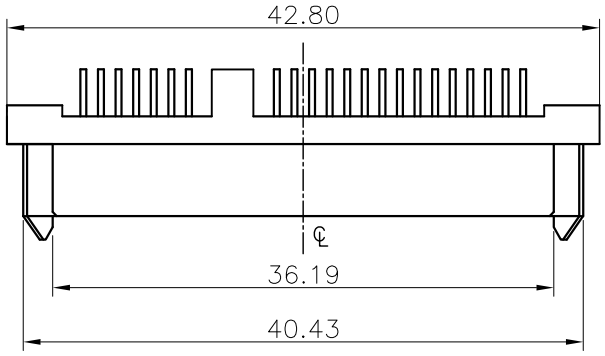

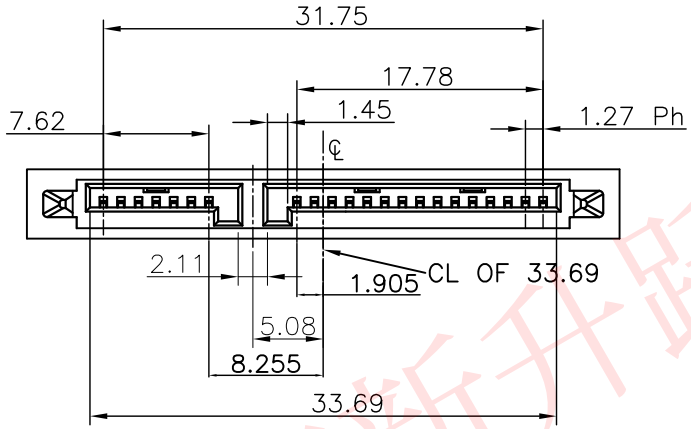

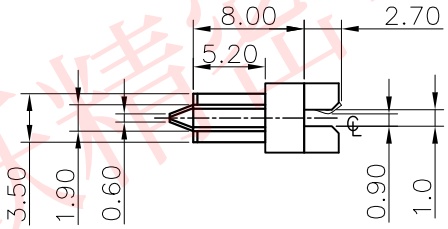

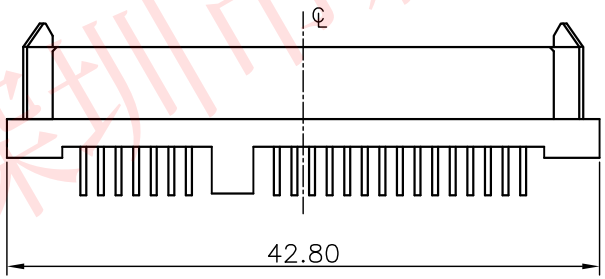

NOTE:

1. MATERIAL:
   HOUSING: LCP WITH 30% GF, UL 94V-0, BLACK COLOR.
   CONTACTS: BRASS.

2. FINISH:
   CONTACTS: GOLD FALSH PLATED ON CONTACT AREA, [100μ"] MIN..
   BRIGHT-TIN ON SOLDER TAIL, WITH ENTIRE CONTACT
   UNDERPLATED [50μ"] MIN.. NICKEL.

3. SPECIFICATION:
   3.1 RATING:1.5A;
   3.2 CONTACT RESISTANCE:≤30mΩ;
   3.3 INSULATION RESISTANCE:≥1000MΩ;
   3.4 WITHSTAND VOLTAGE:AC500V FOR ONE MINUTE,
   CURRENT LEAKAGE:0.5MA MAX;
   3.5 INSERTION AND EXTRACTION FORCE:0.4~4KGF;
   3.6 LIFE TEST:50 CYCLES.

4. PART NUMBER DESCRIPTION :

P/N: 106006-321221

- 3:STRADDLE
- PACKAGING 2: TRAY
- CONTACT AREA PLATED 1: Au G/F
- PIN NUMBER:22PIN
- SERIES NUMBER:1,2.3...

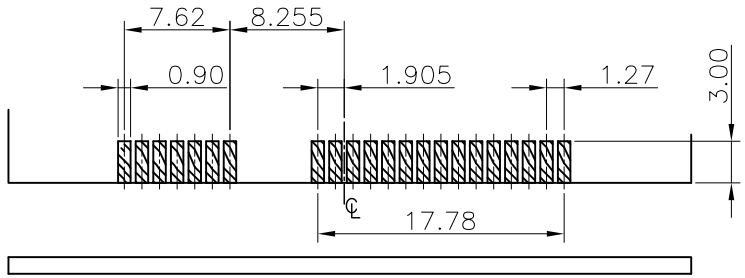

RECOMMEND PCB LAYOUT (T=1.0/1.2)
PCB TOLERANCE:±0.05

TOLERANCE		NAME(INTENDED USE) CUSTOMER DRAWING	XSUA® 深圳市新升跃精密电子有限公司 SHENZHEN XINSHENGYUE PRECISION ELECTRONICS CO., LTD
X.X ±0.30	X.° ±10°	PART NO. SEE P/N	TITLE: SATA 7+15P 母座H8.0夹板1.0
.XX ±0.20	.X° ± 8°		
.XXX ±0.10	.XX° ± 5°	DESIGN: JASON	DRAWG NO. C-106006
UNIT	mm	CHED: CHECK	SCALE 1:1 / SHEET 1/2 / REV. A
MATERIAL	---	APPD: ARAY	
FINISH	---		

深圳市新升跃精密电子有限公司

This document is the property of Xinshengyue Corporation and is delivered on the express condition that it is not to be disclosed, reproduced or used, in whole or in part, for manufacture or sale by anyone other than Xinshengyue Corporation without its prior concert&that no right is granted to disclose or to use any information in this document.

REV.	ECN NO.	DESCRIPTION	DATE	DESIGN
A	ECN NO.	INITIAL RELEASED	2026.10.05	JASON

RoHS Compliant

1-1 将SATA产品整齐的装入真空盒底盒内.
1-2 将真空盒盖盖在装有成品的底盒上，以免产品漏失。

备注：
每盘装成品50PCS

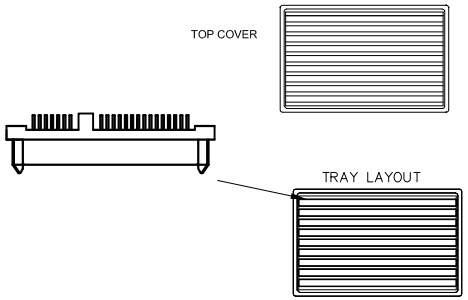

2-1 每箱分2扎装，每扎顶层放盖子1PCS：每扎共20盘，用PE膜扎成一扎；每箱的数量小计：
（50*40）+（50*40）=4000CS

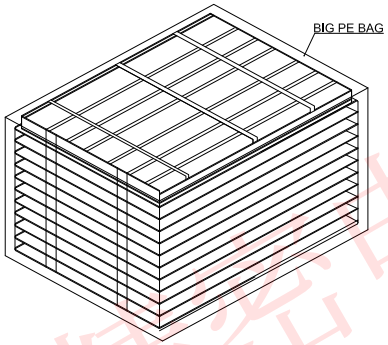

3-1 将2摞成品依次放入纸箱内.备注：
纸箱规格：长52*宽26*高22CM

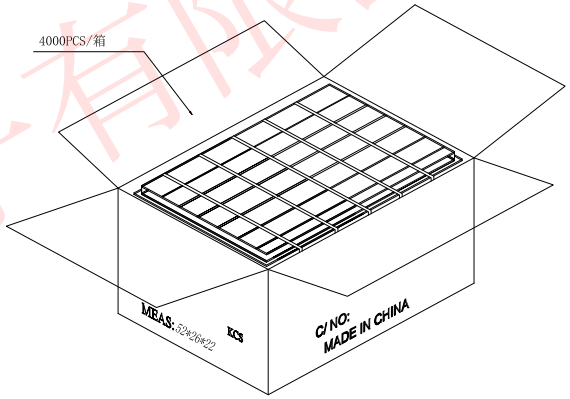

4-1 纸箱开口处以透明胶带贴合.
4-2 若有未装满的零数箱,必须以缓冲材塞满.

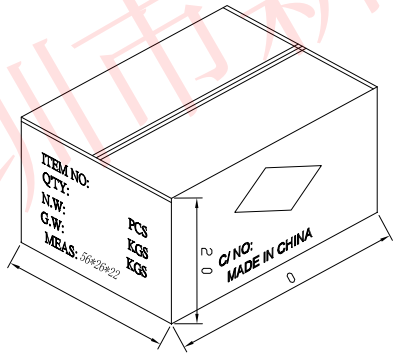

TOLERANCE		NAME(INTENDED USE) CUSTOMER DRAWING	XSUA® 深圳市新升跃精密电子有限公司 SHENZHEN XINSHENGYUE PRECISION ELECTRONICS CO., LTD
X.X ±0.30	X.° ±10°	PART NO. SEE P/N	TITLE: SATA 7+15P 母座H8.0夹板1.0
.XX ±0.20	.X° ± 8°		
.XXX ±0.10	.XX° ± 5°		
UNIT	mm	DESIGN: JASON	DRAWG NO. C-106006
MATERIAL	---	CHED: CHECK	SCALE 1:1 / SHEET 2/2 / REV. A
FINISH	---	APPD: ARAY	

深圳市新升跃精密电子有限公司