This document is the property of Xinshengyue Corporation and is delivered on the express condition that it is not to be disclosed, reproduced or used, in whole or in part, for manufacture or sale by anyone other than Xinshengyue Corporation without its prior concert&that no right is granted to disclose or to use any information in this document.

REV.	ECN NO.	DESCRIPTION	DATE	DESIGN
A	ECN NO.	INITIAL RELEASED	2026.10.05	JASON

RoHS Compliant

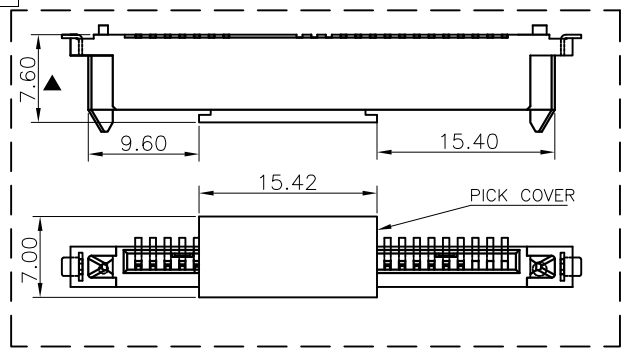

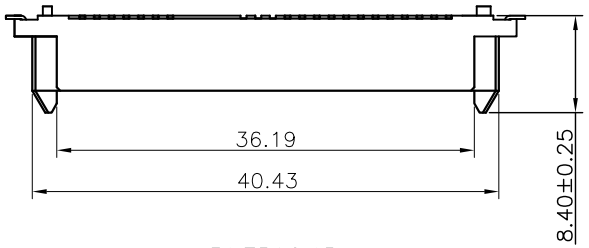

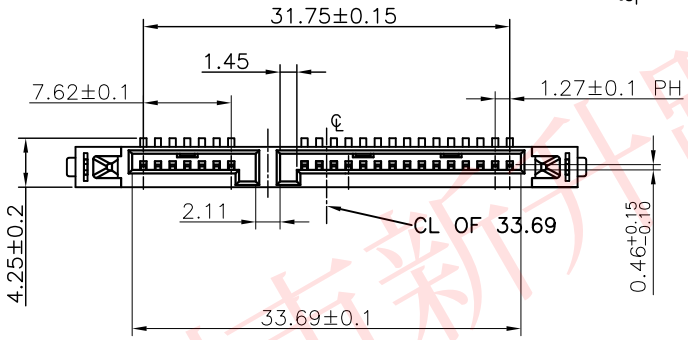

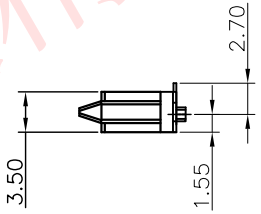

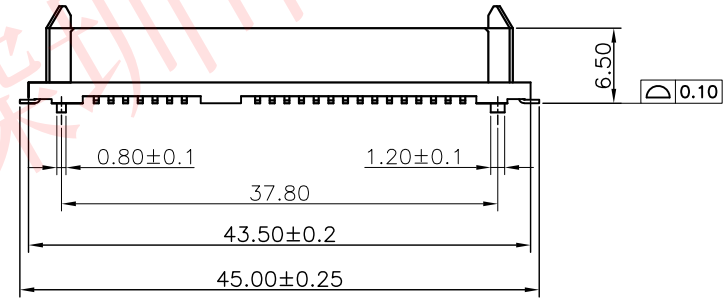

NOTE:

1. MATERIAL:
   HOUSING: LCP WITH 30% GF, UL 94V-0, BLACK COLOR.
   CONTACTS: BRASS.
   BOARDLOCKS: BRASS.

2. FINISH:
   CONTACTS: GOLD FALSH PLATED ON CONTACT AREA, [100m"] MIN.. BRIGHT-TIN ON SOLDER TAIL, WITH ENTIRE CONTACT UNDERPLATED [50m"] MIN.. NICKEL.
   BOARDLOCKS: [100m"] MIN. BRIGHT-TIN OVER[50m"] MIN. NICKEL ON ENTIRE BOARDLOCK.

3. PART NUMBER DESCRIPTION :

P/N: 106007-211221
- 2:SMT — PACKAGING
- 1: REEL — PACKAGING
- SERIES NUMBER:1,2.3...
- PIN NUMBER:22PIN
- CONTACT AREA PLATED
- 1: Au G/F

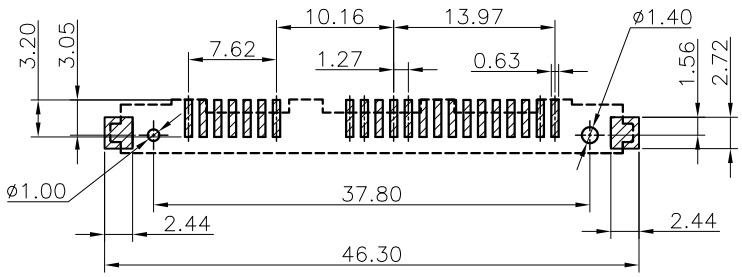

RECOMMEND PCB LAYOUT
PCB TOLERANCE:±0.05

TOLERANCE		NAME(INTENDED USE) CUSTOMER DRAWING	XSUA® 深圳市新升跃精密电子有限公司 SHENZHEN XINSHENGYUE PRECISION ELECTRONICS CO., LTD
X.X ±0.30	X.° ±10°	PART NO. SEE P/N	TITLE: SATA 7+15P母座短体 立式SMT H=6.5
.XX ±0.20	.X° ± 8°		
.XXX ±0.10	.XX° ± 5°	DESIGN: JASON	DRAWG NO. C-106007
UNIT	mm	CHED: CHECK	SCALE 1:1 / SHEET 1/2 / REV. A
MATERIAL	---	APPD: ARAY	
FINISH	---		

深圳市新升跃精密电子有限公司

This document is the property of Xinshengyue Corporation and is delivered on the express condition that it is not to be disclosed, reproduced or used, in whole or in part, for manufacture or sale by anyone other than Xinshengyue Corporation without its prior concert&that no right is granted to disclose or to use any information in this document.

REV.	ECN NO.	DESCRIPTION	DATE	DESIGN
A	ECN NO.	INITIAL RELEASED	2026.10.05	JASON

RoHS Compliant

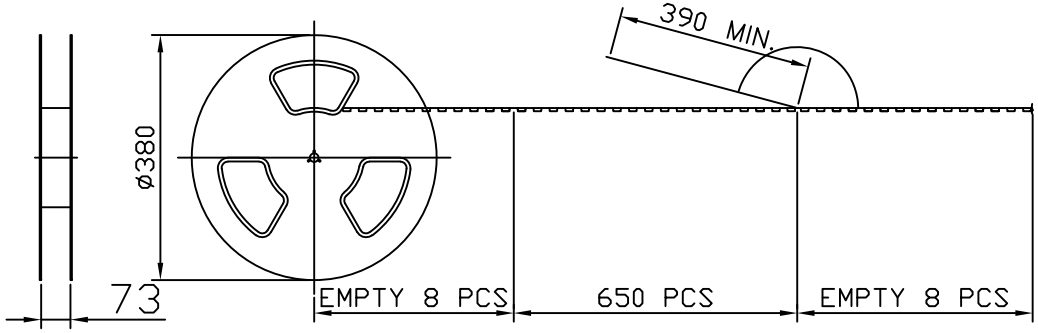

NOTE:
1.QUANTITY/REEL:650 PCS
數量/卷:650 PCS
QUANTITY/INNER CARTON:650 X 5 = 3250 PCS
數量/箱: 650 X 5 = 3250 PCS
2.FREE 8 CAVE IN THE FRONT CARRIER ADN FREE 8 CAVE IN THE END CARRIER.
包装带内圈空8格,外圈空8格.

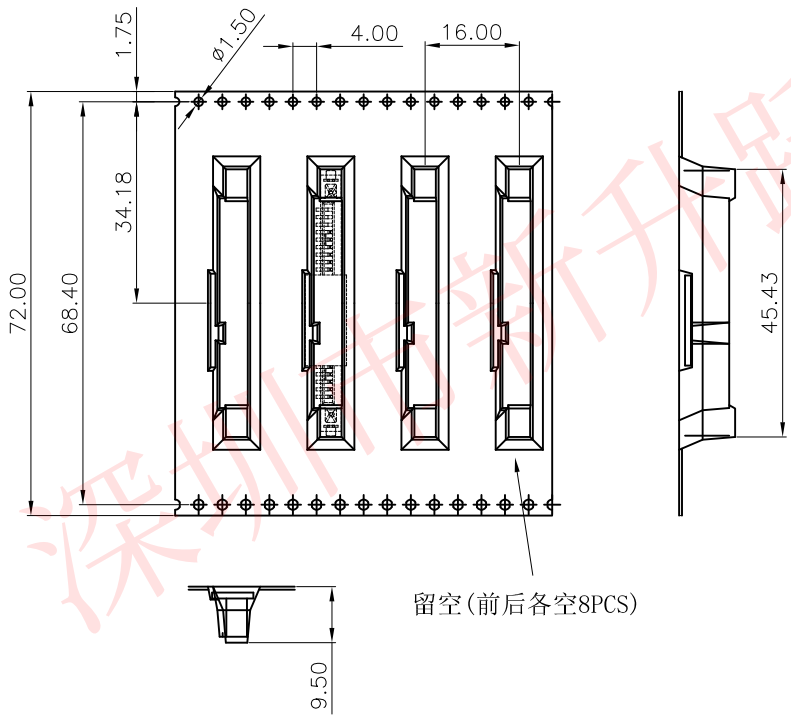

拉出方向

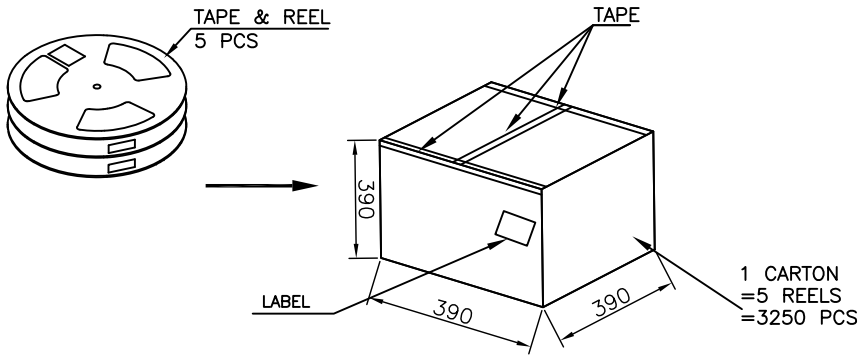

TOLERANCE		NAME(INTENDED USE) CUSTOMER DRAWING	XSUA® 深圳市新升跃精密电子有限公司 SHENZHEN XINSHENGYUE PRECISION ELECTRONICS CO., LTD
X.X ±0.30	X.° ±10°	PART NO. SEE P/N	TITLE: SATA 7+15P母座短体 立式SMT H=6.5
.XX ±0.20	.X° ± 8°		
.XXX ±0.10	.XX° ± 5°		
UNIT	mm	DESIGN: JASON	DRAWG NO. C-106007
MATERIAL	---	CHED: CHECK	SCALE 1:1 / SHEET 2/2 / REV. A
FINISH	---	APPD: ARAY	

深圳市新升跃精密电子有限公司