This document is the property of Xinshengyue Corporation and is delivered on the express condition that it is not to be disclosed, reproduced or used, in whole or in part, for manufacture or sale by anyone other than Xinshengyue Corporation without its prior concert&that no right is granted to disclose or to use any information in this document.

REV.	ECN NO.	DESCRIPTION	DATE	DESIGN
A	ECN NO.	INITIAL RELEASED	2026.10.05	JASON

RoHS Compliant

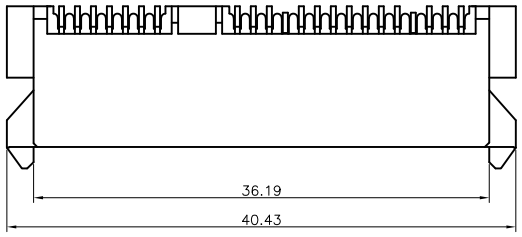

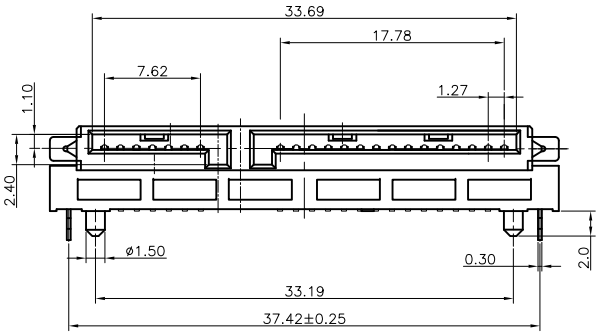

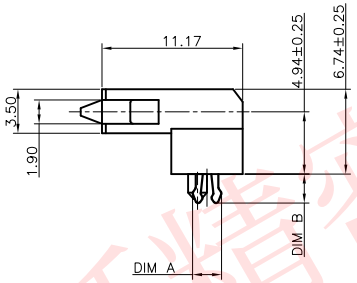

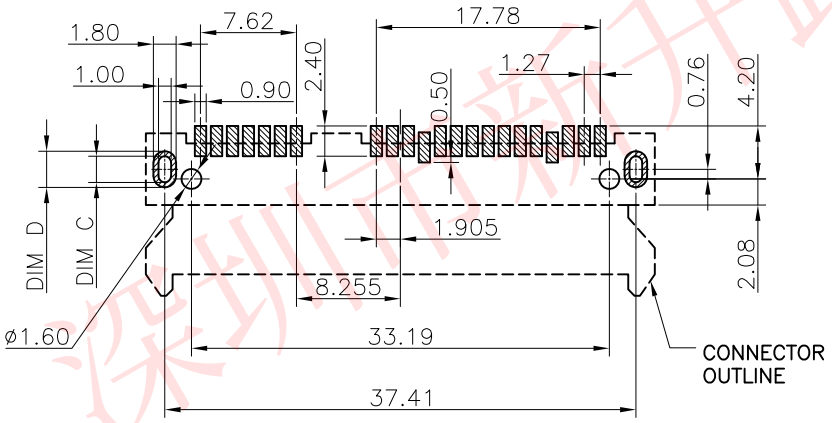

TOLERANCE: ±0.05,
RECOMMENDED PCB LAYOUT
(TOP VIEW)

NOTE:

1. MATERIAL:
   HOUSING: LCP WITH 30% GF, UL 94V-0, BLACK COLOR.
   CONTACTS: BRASS.
   BOARDLOCKS: BRASS.

2. FINISH:
   CONTACTS: GOLD FALSH PLATED ON CONTACT AREA, [100μ"] MIN..
   BRIGHT-TIN ON SOLDER TAIL, WITH ENTIRE CONTACT
   UNDERPLATED [50μ"] MIN.. NICKEL.
   BOARDLOCKS: [100μ"] MIN. BRIGHT-TIN OVER[50μ"] MIN.
   NICKEL ON ENTIRE BOARDLOCK.

3. PART NUMBER DESCRIPTION :

P/N: 106010-221221

- 2:SMT
- PACKAGING 2: TRAY
- Remark: 1:DIM A=2.30, 2:DIM A=2.54
- PIN NUMBER:22PIN
- CONTACT AREA PLATED 1: Au G/F

TABLE A:

106010-221222	3.30	2.50	2.08	2.54	02
106010-221221	3.08	2.28	2.30	2.30	01
PART NO.	DIM D	DIM C	DIM B	DIM A	ITEM
	P.C.BOARD		CONNECTOR		

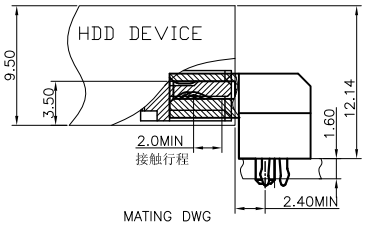

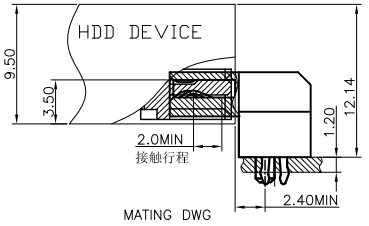

TOLERANCE		NAME(INTENDED USE) CUSTOMER DRAWING	XSUA® 深圳市新升跃精密电子有限公司 SHENZHEN XINSHENGYUE PRECISION ELECTRONICS CO., LTD
X.X ±0.30	X.° ±10°	PART NO. SEE P/N	TITLE: SATA 7+15P母座板下SMT H=6.74mm鱼叉脚
.XX ±0.20	.X° ± 8°		
.XXX ±0.10	.XX° ± 5°		
UNIT	mm	DESIGN: JASON	DRAWG NO. C-106010
MATERIAL	---	CHED: CHECK	SCALE 1:1 / SHEET 1/2 / REV. A
FINISH	---	APPD: ARAY	

深圳市新升跃精密电子有限公司

This document is the property of Xinshengyue Corporation and is delivered on the express condition that it is not to be disclosed, reproduced or used, in whole or in part, for manufacture or sale by anyone other than Xinshengyue Corporation without its prior concert&that no right is granted to disclose or to use any information in this document.

REV.	ECN NO.	DESCRIPTION	DATE	DESIGN
A	ECN NO.	INITIAL RELEASED	2026.10.05	JASON

RoHS Compliant

1-1 将SATA产品整齐的装入真空盒底盒内.
1-2 将真空盒盖盖在装有成品的底盒上，以免产品漏失。

备注：
每盘装成品 50PCS

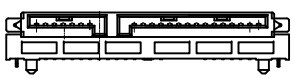

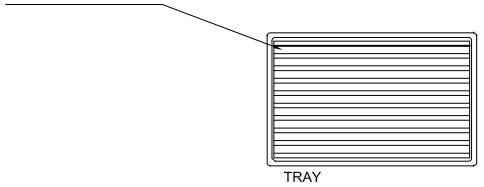

2-1 每扎1800pcs，每扎顶层放盖子1PCS：每扎共16盘，
用PE膜扎成一扎；每箱的数量小计：
50*16=800CS

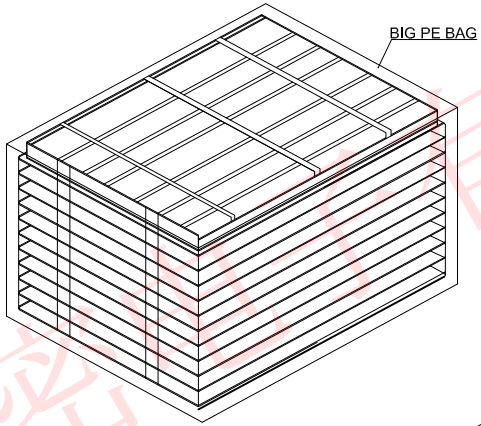

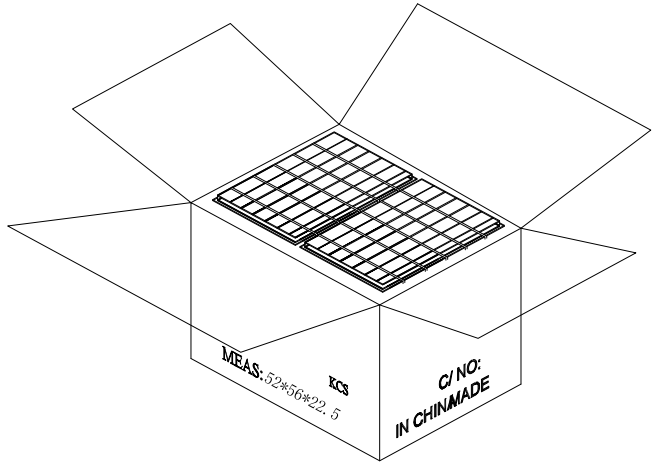

3-1 将2扎成品依次放入纸箱内. 1600pcs

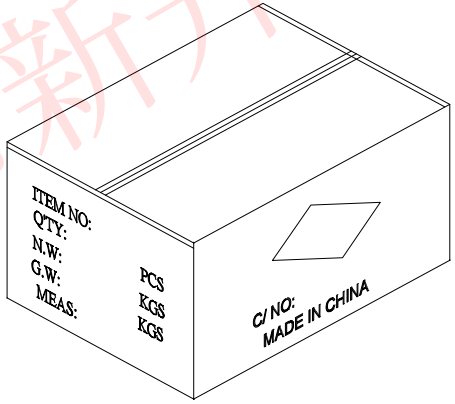

4-1 纸箱开口处以透明胶带贴合.
4-2 若有未装满的零数箱,必须以缓冲材塞满.

TOLERANCE		NAME(INTENDED USE) CUSTOMER DRAWING	XSUA® 深圳市新升跃精密电子有限公司 SHENZHEN XINSHENGYUE PRECISION ELECTRONICS CO., LTD
X.X ±0.30	X.° ±10°	PART NO. SEE P/N	TITLE: SATA 7+15P母座板下SMT H=6.74mm鱼叉脚
.XX ±0.20	.X° ± 8°		
.XXX ±0.10	.XX° ± 5°	DESIGN: JASON	DRAWG NO. C-106010
UNIT	mm	CHED: CHECK	SCALE 1:1 / SHEET 2/2 / REV. A
MATERIAL	---	APPD: ARAY	
FINISH	---		

深圳市新升跃精密电子有限公司