This document is the property of Xinshengyue Corporation and is delivered on the express condition that it is not to be disclosed, reproduced or used, in whole or in part, for manufacture or sale by anyone other than Xinshengyue Corporation without its prior concert&that no right is granted to disclose or to use any information in this document.

REV.	ECN NO.	DESCRIPTION	DATE	DESIGN
A	ECN NO.	INITIAL RELEASED	2026.10.05	JANUS

RoHS Compliant

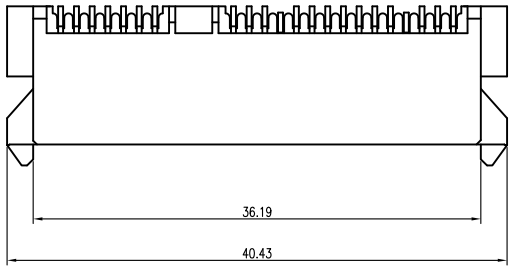

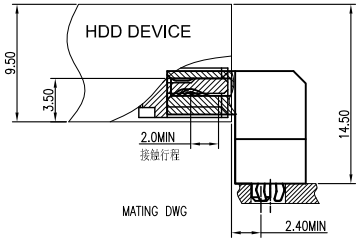

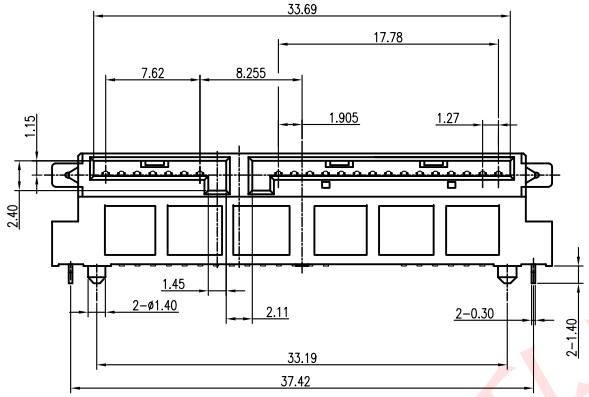

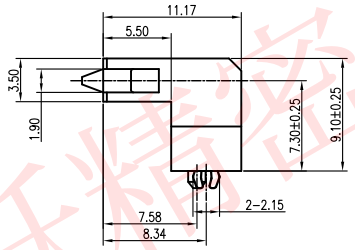

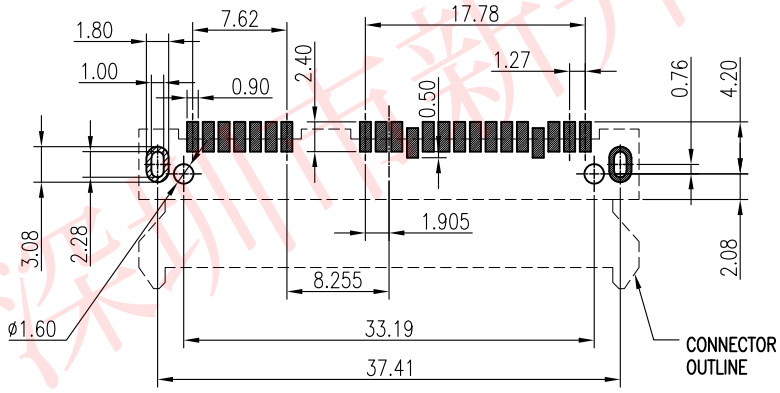

TOLERANCE: ±0.05,
RECOMMENDED PCB LAYOUT
(TOP VIEW)

NOTE:

1. MATERIAL:
   HOUSING: LCP WITH 30% GF, UL 94V-0, BLACK COLOR.
   CONTACTS: PHOSPHOR BRONZE.
   BOARDLOCKS: BRASS.

2. FINISH:
   CONTACTS: GOLD FALSH PLATED ON CONTACT AREA, [100m"] MIN.. BRIGHT-TIN ON SOLDER TAIL, WITH ENTIRE CONTACT UNDERPLATED [50m"] MIN.. NICKEL.
   BOARDLOCKS: [100m"] MIN. BRIGHT-TIN OVER[50m"] MIN. NICKEL ON ENTIRE BOARDLOCK.

3. PART NUMBER DESCRIPTION:

P/N: 106011-211221

- 2:SMT
- PACKAGING 1: REEL
- CONTACT AREA PLATED 1: Au G/F
- PIN NUMBER:22PIN
- SERIES NUMBER:1,2,3...

TOLERANCE		NAME(INTENDED USE) CUSTOMER DRAWING	XSUA® 深圳市新升跃精密电子有限公司 SHENZHEN XINSHENGYUE PRECISION ELECTRONICS CO., LTD
X.X ±0.30	X.° ±10°	PART NO. SEE P/N	TITLE: SATA 7+15P母座板下SMT H=9.10mm下两针
.XX ±0.20	.X° ± 8°		
.XXX ±0.10	.XX° ± 5°		
UNIT	mm	DESIGN: JANUS	DRAWG NO. C-106011
MATERIAL	---	CHED: JANUS	SCALE 1:1 / SHEET 1/2 / REV. A
FINISH	---	APPD: ARAY	

深圳市新升跃精密电子有限公司

This document is the property of Xinshengyue Corporation and is delivered on the express condition that it is not to be disclosed, reproduced or used, in whole or in part, for manufacture or sale by anyone other than Xinshengyue Corporation without its prior concert&that no right is granted to disclose or to use any information in this document.

REV.	ECN NO.	DESCRIPTION	DATE	DESIGN
A	ECN NO.	INITIAL RELEASED	2026.10.05	JANUS

RoHS Compliant

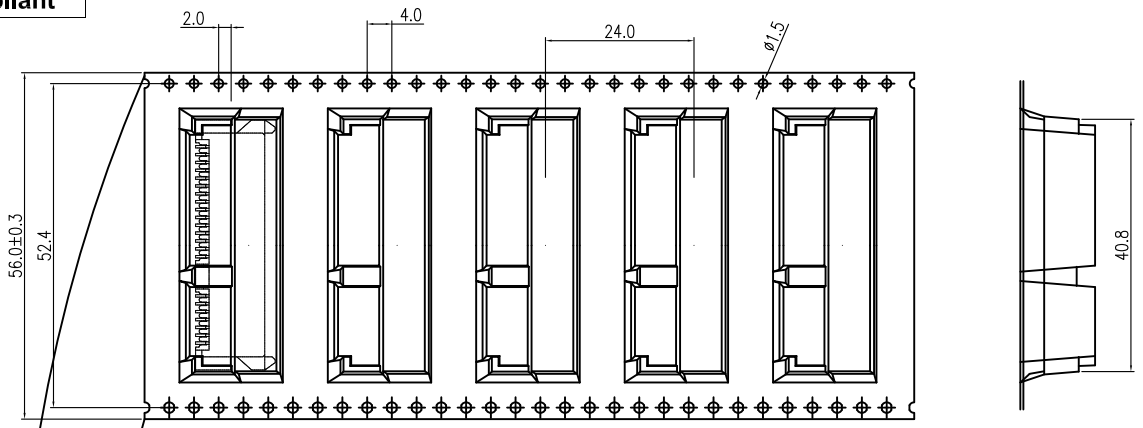

包装要求：

1. 成品包装数量300pcs/卷，外箱包装6卷，箱装数量1800PCS
2. 箱内四边放护角4PCS，外箱用透明胶带封口



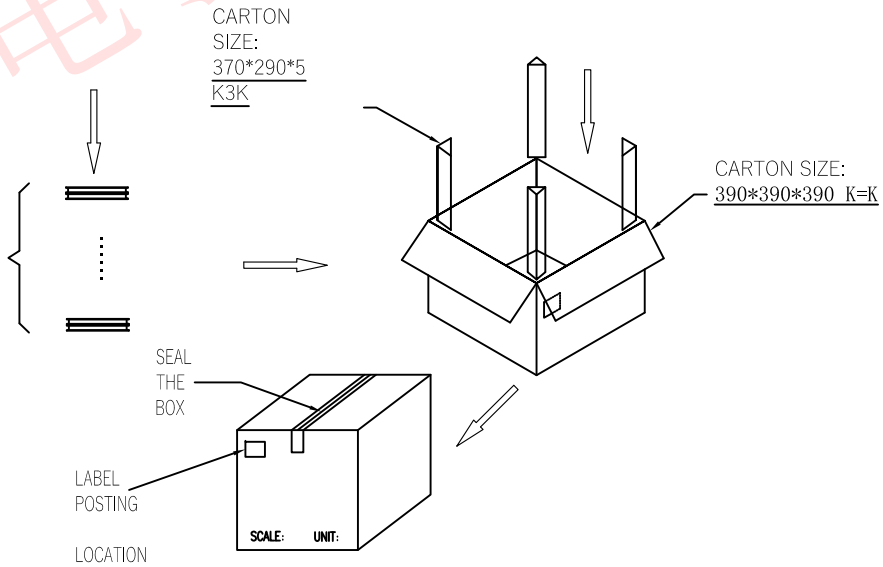

载带为热封包装，热封盖带的剥离角度为165°-180°，剥离力为30g-120g

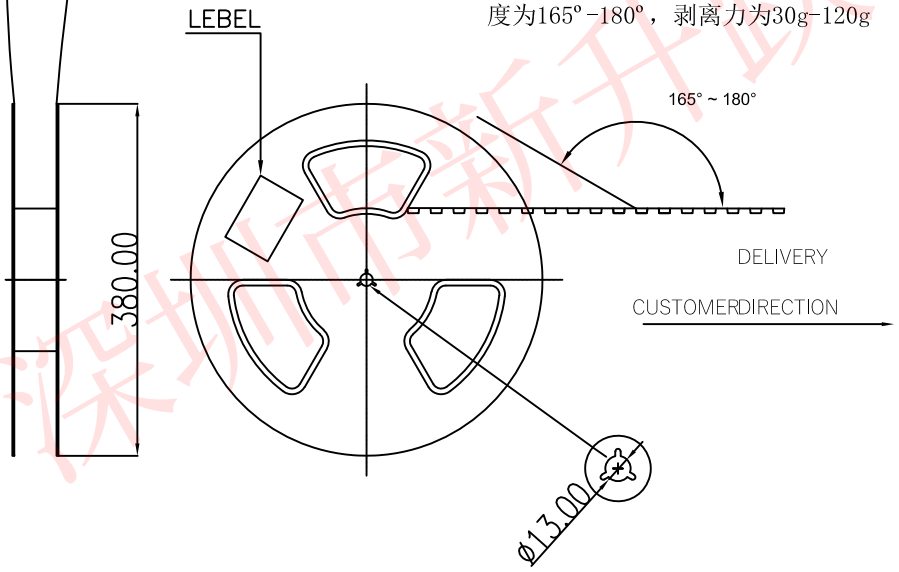

TOLERANCE		NAME(INTENDED USE) CUSTOMER DRAWING	XSUA® 深圳市新升跃精密电子有限公司 SHENZHEN XINSHENGYUE PRECISION ELECTRONICS CO., LTD
X.X ±0.30	X.° ±10°	PART NO. SEE P/N	TITLE: SATA 7+15P母座板下SMT H=9.10mm下两针
.XX ±0.20	.X° ± 8°		
.XXX ±0.10	.XX° ± 5°	DESIGN: JANUS	DRAWG NO. C-106011
UNIT	mm	CHED: JANUS	SCALE 1:1 / SHEET 2/2 / REV. A
MATERIAL	---	APPD: ARAY	
FINISH	---		

深圳市新升跃精密电子有限公司